MOVE THE WORLD FORWARD MITSUBISHI HEAVY INDUSTRIES GROUP

## THD13-15N3 Series

# MAN-DOWN VNA TRUCK

1.3 - 1.5 tonnes

## VNA MASTERY...
## REACH TRUCK-LIKE AGILITY

Narrow aisles and high racking let you maximise your valuable warehouse space. With the THD13-15N3 Series you get an exceptional VNA truck with reach truck-like agility as well as many similar features - the perfect combination to make the most of your optimised layout.

**SPECIFICATIONS**

THD13N3
THD15N3

**WHEN RELIABILITY IS EVERYTHING...**

MITSUBISHI FORKLIFT TRUCKS

# THD13-15N3 Series

# MAN-DOWN VNA TRUCK

1.3 – 1.5 tonnes

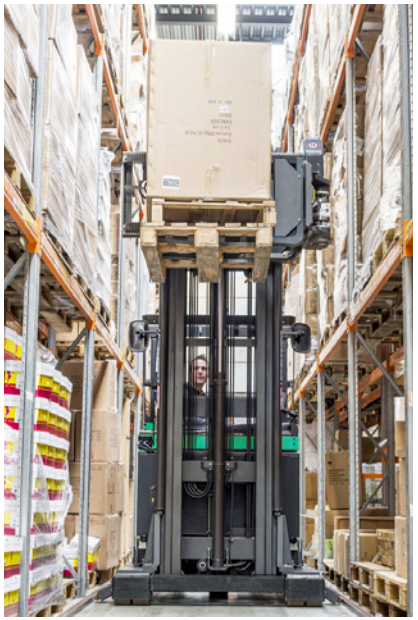

**Its market-leading performance – with top speeds of up to 14 km/h – combined with ergonomic design and comprehensive safety features make for high productivity through incredibly efficient, safe operation.**

When outside of aisles, VNA trucks can often be less efficient and manoeuvrable. This usually means P&D stations and feeder trucks are needed so the VNA trucks can remain in the aisles. The cycle times of VNA trucks and feeder trucks rarely sync up, which means time wasted while one is sat idle.

By combining the best of man-down VNA and reach truck capability in a single truck, operators can fetch their own pallets without having to rely on extra staff and head straight into the very narrow aisles. With trucks that do both, you can optimise your space and optimise your operations: lower costs by streamlining the number of trucks and personnel, and increase capacity by not having P&D stations.

## BRAKES

- **End of aisle braking system (option)**
  The truck automatically slows as it reaches the end of an aisle for greater safety.

## DRIVE

- **Automatic Speed Reduction**
  When the truck is outside of stacking aisles, drive speed is automatically limited when forks are above a certain height.
- **Durable drive wheel**
  Low-wear drive wheel means less maintenance and lower costs.
- **Active Spin Reduction (option)**
  Helps to stop the drive wheel spinning. This minimises grip loss while also reducing wear on the wheel.

## ELECTRICAL AND CONTROL SYSTEMS

- **On-board diagnostics and fault memory folder**
  Speed up servicing and help prevent damage.

## FORKS AND MAST

- **Level Assistance System (option)**
  Automatically detects the operator's intention and stops when the forks are at precisely the right level.

## FRAME AND BODY

- **Robust chassis**
  Built for intensive operations, with great inherent strength and high residual capacities.
- **Modular design**
  Limits the number of parts used meaning service engineers can carry fewer parts to keep the first-time fix rate incredibly high.

## OPERATOR COMPARTMENT AND CONTROLS

- **Easy-access compartment**
  Features like ergonomic hand bars, low non-slip step and a wide entry provide safe and effortless entry and exit.
- **Multifunctional Ergologic Joystick**
  This intuitive and highly ergonomic joystick controls up to seven different functions, including lifting, lowering, fork rotation, fork traversal, and direction control (optional)
- **Electrically adjustable floor height**
  Can be adjusted to suit each operator to provide a more ergonomic seating position.
- **Spacious and comfortable cabin, clear view and fast, accurate fork positioning**
  This all helps to increase productivity and reduce risks of driver fatigue - even on the longest shifts.
- **Tilting seat with ergonomic backrest**
  Drivers are kept safe, comfortable, and alert through long shifts.

**There is more information on the Mitsubishi Man-Down VNA Trucks on mitforklift.com**

For more extensive information please visit our website mitforklift.com

mft2.eu/thdn3

Continuing improvement may lead to changes in these specifications

# THD13-15N3 Series
# MAN-DOWN VNA TRUCK

1.3 – 1.5 tonnes

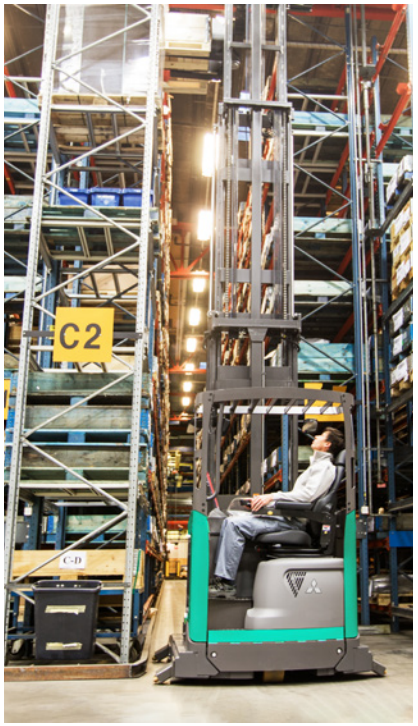


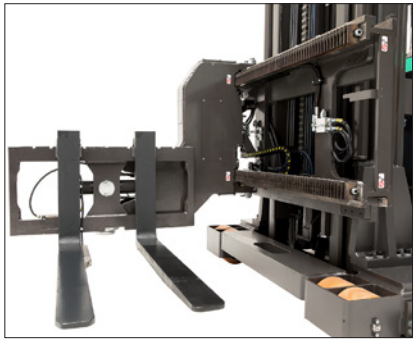

- **Automotive-style pedals**
  Pedals are placed in a familiar position for intuitive operation.
- **Hands-free direction controls**
  Directional controls in the accelerator means the control workload can be distributed between hands and feet.
- **Hand-operated direction control (option)**
  Suitable for environments where pedal direction control would be difficult, or for operators who prefer to control direction with their hands.
- **Mast mirrors**
  Adjustable curved mirrors give the operator an excellent view of the truck, load, or fork tips from their normal driving position while at ground level.
- **PIN-code access**
  Stops unauthorised truck use and keeps you aware of who's operating at all times.
- **Transparent overhead guard (option)**
  Improves safety by offering an unobstructed view of forks and load.
- **Fingertip hydraulic controls (option)**
  Integrated, fully adjustable, and allows effortless precision.
- **Position light (option)**
  Aligning the red laser with rack marking allows the driver to quickly ensure the forks are central to the desired position.

## STEERING SYSTEM

- **Mini steering wheel with floating armrest**
  Ergonomically adjustable to reduce strain and lower risk of RSI.
- **360-degree steering (option)**
  Selectable via personal PIN code. The operator can keep the truck in constant motion - saving seconds on every turn.
- **Midi steering wheel (option)**
  Adjustable positioning with tilt function.

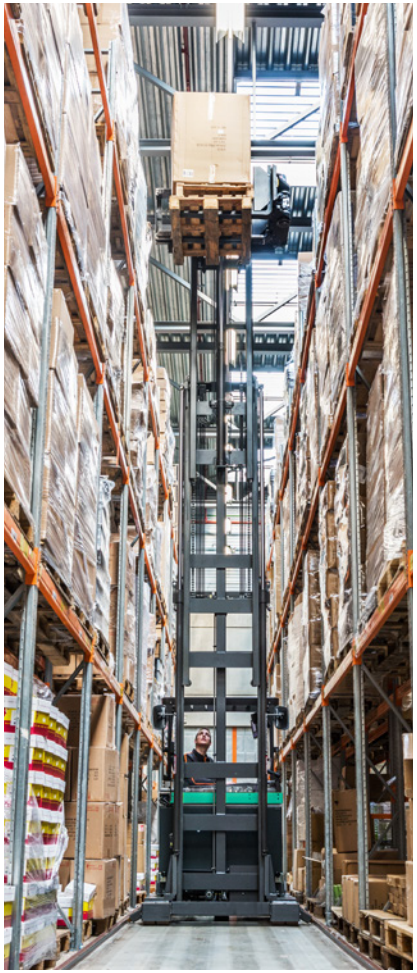

**There is more information on the Mitsubishi Man-Down VNA Trucks on mitforklift.com**

For more extensive information please visit our website mitforklift.com

mft2.eu/thdn3

# VDI - PERFORMANCE & DIMENSIONS

| | | | | | |
|---|---|---|---|---|---|
| | **CHARACTERISTICS** | | | | |
| 1.1 | Manufacturer | | | Mitsubishi Forklift Trucks | Mitsubishi Forklift Trucks |
| 1.2 | Manufacturer's model designation | | | THD13N3 | THD15N3 |
| 1.3 | Power source | | | Battery | Battery |
| 1.4 | Operator type | | | Seated | Seated |
| 1.5 | Load capacity | Q | kg | 1250 | 1500 |
| 1.6 | Load center distance | c | mm | 400 - 600 | 400 - 600 |
| 1.9 | Wheelbase | y | mm | 1534 | 1534 |
| | **WEIGHT** | | | | |
| 2.1b | Truck weight without load, with maximum battery weight | | kg | 6674 | 6674 |
| 2.3 | Axle loadings without load & with maximum battery weight, drive / load side | | kg | 2804 / 3870 | 2804 / 3870 |
| | **WHEELS, DRIVE TRAIN** | | | | |
| 3.1 | Tyres: PT = Power Thane, Vul = Vulkollan, P = Polyurethane, N = Nylon, R = Rubber drive / load side | | | Vul | Vul |
| 3.2 | Tyre dimensions, drive side | | mm | 355 × 155 | 355 × 155 |
| 3.3 | Tyre dimensions, load side | | mm | 200 × 110 | 200 × 110 |
| 3.5 | Number of wheels, load / drive side (x = driven) | | | 4 / 1x | 4 / 1x |
| 3.7 | Track width (center of tyres), load side | b11 | mm | 1312 | 1312 |
| | **DIMENSIONS** | | | | |
| 4.2a | Height with mast lowered | h1 | mm | see table | see table |
| 4.3 | Free lift | h2 | mm | see table | see table |
| 4.4 | Lift height | h3G + h13 | mm | see table | see table |
| 4.5 | Height with mast extended | h4 | mm | see table | see table |
| 4.7 | Height to top of overhead guard | h6 | mm | 2205 | 2205 |
| 4.8 | Seat- or stand height | h7 | mm | 1077 | 1077 |
| 4.10 | Height of support legs | h8 | mm | 230 | 230 |
| 4.15 | Fork height, fully lowered | h13 | mm | 65 | 65 |
| 4.19 | Overall length | l1 | mm | 3010 [1] | 3010 [1] |
| 4.21 | Overall width | b1 | mm | 1450 | 1450 |
| 4.22 | Fork dimensions (thickness, width, length) | s/e/l | mm | 40 / 100 / 800, 1000, 1150 | 40 / 100 / 800, 1000, 1150 |
| 4.24 | Fork carriage width | b3 | mm | 730 | 730 |
| 4.25 | Outside width over forks (minimum-maximum) | b5 | mm | 520 / 710 | 520 / 710 |
| 4.27 | Width over guide rollers (minimum-maximum) | b6 | mm | 1594 | 1594 |
| 4.32 | Ground clearance at center of wheelbase, (forks lowered) | m2 | mm | 55 [1] | 55 [1] |
| 4.33 | Working aisle width (Ast) with 1000 x 1200 mm pallets, load crosswise | Ast | mm | 1640 [1] | 1640 [1] |
| 4.34 | Working aisle width (Ast) with 800 x 1200 mm pallets, load lengthwise | Ast | mm | 1640 [1] | 1640 [1] |
| 4.35 | Turning radius | Wa | mm | 1753 [1] | 1753 [1] |
| 4.37 | Truck length including support legs | l7 | mm | 1866 [1] | 1866 [1] |
| 4.41 | Transfer aisle width (pallet 1000 x 1200 mm lengthwise & 200mm clearance) | Au | mm | 3700 [1] | 3700 [1] |
| | **PERFORMANCE** | | | | |
| 5.1 | Travel speed, with / without load | | km/h | 12 [2] | 12 [2] |
| 5.2 | Lifting speed, with / without load | | m/s | 0.38 / 0.47 | 0.34 / 0.47 |
| 5.3 | Lowering speed, with / without load | | m/s | 0.57 / 0.54 | 0.57 / 0.54 |
| 5.7 | Gradeability, with / without load | | % | 4.9 / 5.8 | 4.7 / 5.8 |
| 5.8 | Maximum gradeability with / without load | | % | 10.4 / 12.3 | 10.4 / 12.3 |
| 5.9 | Acceleration time (10 metres) with / without load | | s | 6.5 / 5.5 | 6.0 / 5.5 |
| 5.10 | Service brake | | | Electric | Electric |
| | **ELECTRIC MOTORS** | | | | |
| 6.1 | Drive motor capacity (60 min. short duty) | | kW | 7.2 | 7.2 |
| 6.2 | Lift motor output at 15% duty factor | | kW | 15 | 15 |
| 6.3 | Battery to DIN | | | 43531C | 43531C |
| 6.4 | Battery voltage/capacity at 5-hour discharge | | V/Ah | 48 / 620 - 930 | 48 / 620 - 930 |
| 6.5 | Battery weight | | kg | 1240 - 1567 | 1240 - 1567 |
| | **MISCELLANEOUS** | | | | |
| 8.1 | Type of drive control | | | Electronic | Electronic |
| 10.1 | Maximum operating pressure for attachments | | bar | 150 | 150 |
| 10.2 | Oil flow for attachments | | l / min | 25 | 25 |
| 10.7 | Level of noise at the ear level of the driver according to EN 12 053:2001 and EN ISO 4871 in work LpAZ | | dB(A) | 62.1 | 62.1 |

1) Value dependent on guidance system used.
See table on next page for Wire Guidance and Rail Guidance values.
2) Unguided mode.
For Wire Guided and Rail Guided values see table on next page.

## THD13-15N3 Series

## MAN-DOWN VNA TRUCK

1.3 – 1.5 tonnes

# VDI - PERFORMANCE & DIMENSIONS

## THD13-15N3 Series

## MAN-DOWN VNA TRUCK

1.3 – 1.5 tonnes

| | WIRE GUIDANCE | | | THD13N3 | THD15N3 |
|---|---|---|---|---|---|
| | **DIMENSIONS** | | | | |
| 4.19 | Overall length | l1 | (mm) | 3116 | 3116 |
| 4.33 | Working aisle width (Ast) with 1000 x 1200 mm pallets, load crosswise | Ast | (mm) | 1700 | 1700 |
| 4.34 | Working aisle width (Ast) with 800 x 1200 mm pallets, load lengthwise | Ast | (mm) | 1700 | 1700 |
| 4.35 | Turning radius | Wa | (mm) | 1858 | 1858 |
| 4.37 | Truck length including support legs | l7 | (mm) | 1972 | 1972 |
| 4.41 | Transfer aisle width (pallet 1000 x 1200 mm lengthwise & 200mm clearance) | Au | (mm) | 4200 | 4200 |
| | **PERFORMANCE** | | | | |
| 5.1 | Travel speed, with / without load | | km/h | 9 | 9 |

| | RAIL GUIDANCE | | | THD13N3 | THD15N3 |
|---|---|---|---|---|---|
| | **DIMENSIONS** | | | | |
| 4.19 | Overall length | l1 | (mm) | 3010 | 3010 |
| 4.31 | Ground clearance (lowest point) | m1 | (mm) | 28 | 28 |
| 4.32 | Ground clearance at center of wheelbase, (forks lowered) | m2 | (mm) | 55 | 55 |
| 4.33 | Working aisle width (Ast) with 1000 x 1200 mm pallets, load crosswise | Ast | (mm) | 1640 | 1640 |
| 4.34 | Working aisle width (Ast) with 800 x 1200 mm pallets, load lengthwise | Ast | (mm) | 1640 | 1640 |
| 4.35 | Turning radius | Wa | (mm) | 1753 | 1753 |
| 4.37 | Truck length including support legs | l7 | (mm) | 1866 | 1866 |
| 4.41 | Transfer aisle width (pallet 1000 x 1200 mm lengthwise & 200mm clearance) | Au | (mm) | 3700 | 3700 |
| | **PERFORMANCE** | | | | |
| 5.1 | Travel speed, with / without load | | km/h | 14 | 14 |

# MAST PERFORMANCE AND CAPACITY

| THD13N3 - THD15N3 | | | | |
|---|---|---|---|---|
| MAST TYPE | Lifting height h3 + h13 mm | Lowered mast height h1 mm | Free lift height h2 + h13 mm | Raised mast height h4 mm |
| TRIPLEX | 4950 | 2670 | 1780 | 5840 |
| | 5400 | 2820 | 1930 | 6290 |
| | 5900 | 2987 | 2097 | 6790 |
| | 6600 | 3220 | 2330 | 7490 |
| | 7100 | 3387 | 2497 | 7990 |
| | 7600 | 3553 | 2663 | 8490 |
| | 7950 | 3670 | 2780 | 8840 |
| | 8550 | 3870 | 2980 | 9440 |
| | 9150 | 4070 | 3180 | 10040 |
| | 9750 | 4270 | 3380 | 10640 |
| | 10350 | 4470 | 3580 | 11240 |

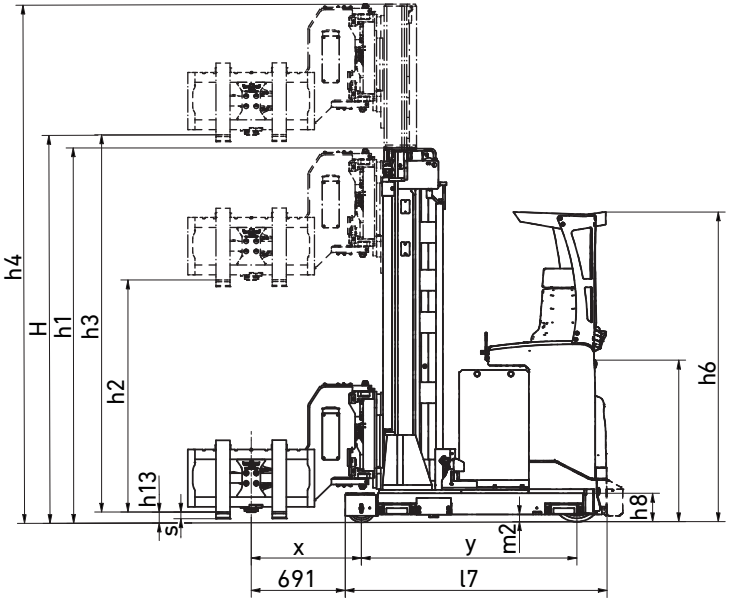


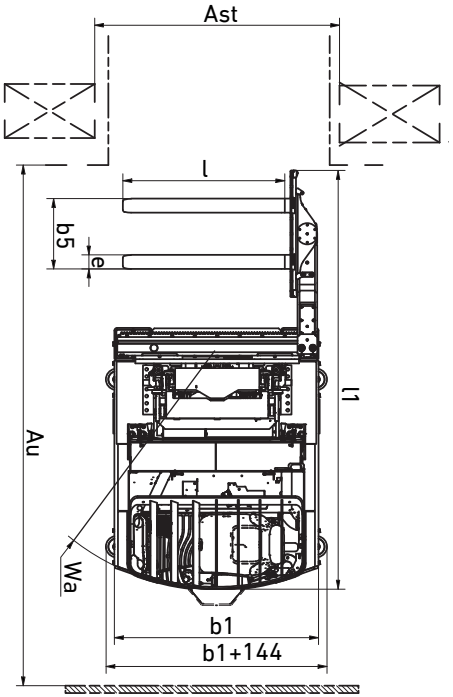

# STANDARD EQUIPMENT & OPTIONS

● = Standard
● = Option

| | THD13N3 | THD15N3 |
|---|---|---|
| **GENERAL** | | |
| Automatic electric parking brake | ● | ● |
| Steering wheel angle indicator | ● | ● |
| Battery indicator with cut out at 20% remaining battery level | ● | ● |
| ATC 3 truck computer with display and keyboard | ● | ● |
| Electric adjustable floor height | ● | ● |
| Suspension seat with weight-controlled tilting high backrest | ● | ● |
| Max drive speed 14 km/h | ● | ● |
| Chill store design, down to +1° Celsius | ● | ● |
| Paper storage and cup holder | ● | ● |
| Battery on steel rollers | ● | ● |
| Other RAL-colour | ● | ● |
| **MAST, FORKS AND CARRIAGE** | | |
| Tri-lateral fork head attachment | ● | ● |
| Side mirrors on mast | ● | ● |
| Lift stop with-/without restart | ● | ● |
| Level selector | ● | ● |
| Level Assistance System (LAS) | ● | ● |
| Lift height indicator | ● | ● |
| Weight and height indication | ● | ● |
| Fork camera with RLED display | ● | ● |
| **DRIVE AND LIFT CONTROLS** | | |
| Mini steering wheel with floating armrest, adjustable height and length | ● | ● |
| 180-degree electric power steering | ● | ● |
| 360-degree electric power steering | ● | ● |
| Midi steering wheel | ● | ● |
| Ergologic Joystick | ● | ● |
| Fingertip controls | ● | ● |
| Hands-free direction control (HFDC) in accelerator pedal | ● | ● |
| Hand-operated direction control | ● | ● |
| Active Spin Reduction (ASR) | ● | ● |
| Creep speed when forks above 500 mm while outside of guided aisle | ● | ● |
| Impact sensors with display warning and horn | ● | ● |
| Impact sensors with display warning, horn and warning light on overhead guard | ● | ● |
| Wire guidance | ● | ● |
| Rail guidance | ● | ● |
| End of Aisle (EoA) drive speed reduction or precise stop | ● | ● |

## THD13-15N3 Series

## MAN-DOWN VNA TRUCK

1.3 – 1.5 tonnes

Battery on steel rollers

Ergologic Joystick

Mini steering wheel

Midi steering wheel

Wire guidance (sensor)

# STANDARD EQUIPMENT & OPTIONS

● = Standard
● = Option

| | THD13N3 | THD15N3 |
|---|---|---|
| **ELECTRIC** | | |
| Blue / Red point safety light, towards forward driving direction | ● | ● |
| Position light laser system | ● | ● |
| Automatic logoff | ● | ● |
| Battery level audible warning | ● | ● |
| Working lights LED | ● | ● |
| Working lights LED for heated cabin | ● | ● |
| Warning light on overhead guard | ● | ● |
| Warning light for heated cabin | ● | ● |
| Key switch entry | ● | ● |
| 12 V connector | ● | ● |
| Converter 48 - 12 V | ● | ● |
| Radio with MP3 | ● | ● |
| Service alarm | ● | ● |
| **OHG AND CABIN** | | |
| Heated cabin | ● | ● |
| Window opening in heated cabin door | ● | ● |
| Two-way intercom for heated cabin | ● | ● |
| Panoramic ProVision roof | ● | ● |
| Metal mesh on overhead guard | ● | ● |
| PVC seat | ● | ● |
| Heated seat – fabric | ● | ● |
| Heated seat – PVC | ● | ● |
| Headrest for seat | ● | ● |
| Rear view mirror | ● | ● |
| Equipment bar (accessory rack) | ● | ● |
| Writing desk | ● | ● |
| Equipment holder, RAM system size C | ● | ● |
| Equipment holder, RAM system size C, 2 pcs | ● | ● |
| Equipment holder, RAM system size D | ● | ● |
| **WHEEL OPTIONS** | | |
| Vulkolan® traction wheel 95 Shore | ● | ● |
| Tractothan® traction wheel 93 Shore | ● | ● |
| Load wheels Ø 200mm | ● | ● |
| **ENVIRONMENT** | | |
| Chill store design, down to +1˚C | ● | ● |
| Cold store design, 0C° to -35C° | ● | ● |

## THD13-15N3 Series

## MAN-DOWN VNA TRUCK

1.3 – 1.5 tonnes

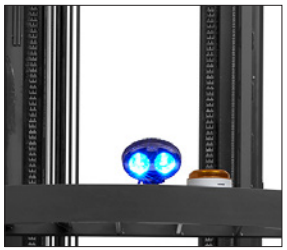

Blue / Red point point safety light

Panoramic ProVision roof

Two-way intercom and window opening for heated cabin

Headrest for seat

# WHEN RELIABILITY IS EVERYTHING...

**Like any product bearing the "MITSUBISHI" name our materials handling equipment benefits from the tremendous heritage, huge resources and cutting-edge technology of one of the world's largest corporations – Mitsubishi Heavy Industries Group.**

Engineering spacecraft, jet planes, power plants and more, MHI specialises in those technologies where performance, dependability and superiority decide your success or failure...

So when we promise you quality, reliability and value for money, you know it's a guarantee we have the power to deliver.

That's why every model in our award-winning and comprehensive range of lift trucks and warehouse equipment is built to a high specification – to ensure it keeps working for you. Day after day. Year after year. Whatever the job. Whatever the conditions.

## YOU'LL NEVER WORK ALONE

As your local authorised dealer, we are here to keep your trucks working – through our extensive experience, our technical excellence and our commitment to customer care.

We are your local experts, backed by efficient channels to the entire organisation of Mitsubishi Forklift Trucks.

No matter where you are, we are close by – with the capability to meet your needs.

Discover how Mitsubishi Forklift Trucks give you more from your local authorised dealer or when you visit our website www.mitforklift.com

Performance specifications may vary depending on standard manufacturing tolerances, vehicle condition, types of tyres, floor or surface conditions, applications or operating environment. Trucks may be shown with non-standard options. Specific performance requirements and locally available configurations should be discussed with your distributor of Mitsubishi forklift trucks. We follow a policy of continual product improvement. For this reason, some materials, options and specifications could change without notice.

info@mitforklift.com

WESM2127 (04/21) © 2021 MLE

Mitsubishi Logisnext Europe B.V.
Hefbrugweg 77, 1332 AM Almere
The Netherlands
Tel: +31 (0)36 5494 411

MITSUBISHI FORKLIFT BRIEFING

mft2.eu/fb

App Store Google Play

mft2.eu/apps

YouTube

mft2.eu/youtube

mft2.eu/facebook

MITSUBISHI FORKLIFT TRUCKS