PRELIMINARY
SPECIFICATIONS

MOVE THE WORLD FORWARD MITSUBISHI HEAVY INDUSTRIES GROUP

RBM20-25N3 Series

4-WAY REACH TRUCKS

2.0 - 2.5 tonnes

STRONG, STABLE, SWIFT...
EVEN IN SMALL SPACES

The RBM20-25N3 Series of four-way reach trucks is an ideal choice if you're looking for a smart, flexible, and highly ergonomic reach truck that can deal with long or bulky goods with ease.

SPECIFICATIONS

RBM20N3
RBM25N3

WHEN RELIABILITY IS EVERYTHING...

MITSUBISHI FORKLIFT TRUCKS

RBM20-25N3 Series

4-WAY REACH TRUCKS

2.0 – 2.5 tonnes

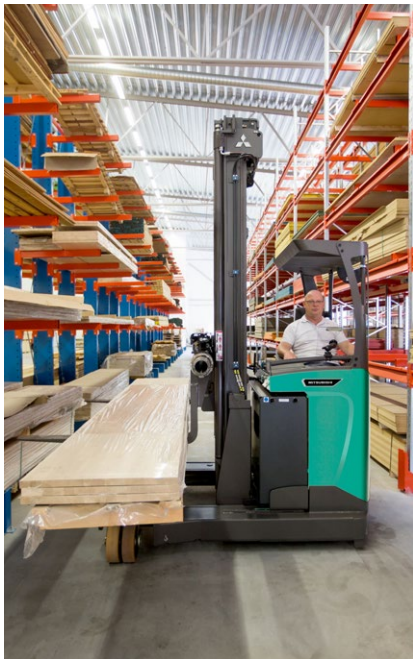

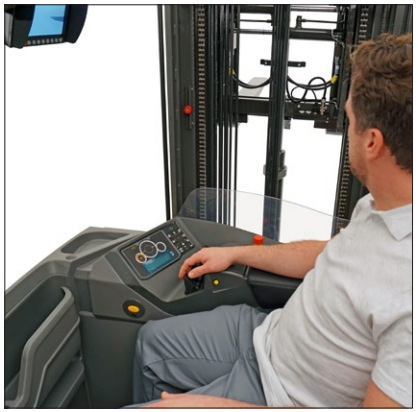

Equally capable of handling long loads and standard pallets, the RBM20-25N3 Series offers lift heights up to 9.7 metres. As it's four-way and can carry long loads sideways, aisles can be kept to a minimum, allowing you to maximise storage space.

With a long battery life and a suite of operator-focused features available, it makes lengthy shifts a breeze for both truck and driver. Exceptional all-round visibility and stability aides allow operators to work with greater confidence and safety. Combined with a top speed of 13 km/h this makes for an incredibly efficient and productive truck.

DRIVE

- **Intelligent Cornering System**
  The truck senses the angle of a turn and reduces speed early for maximum stability and accurate, positive cornering.
- **Active Spin Reduction (ASR)**
  Helps to stop the drive wheel spinning. This minimises grip loss while also reducing wear on the wheel.
- **Durable drive wheel**
  Low-wear drive wheel means less maintenance and lower costs.

ELECTRICAL AND CONTROL SYSTEMS

- **On-board diagnostics and fault memory folder**
  Speed up servicing and help prevent damage.
- **Quick battery inspection**
  Battery is on steel rollers for ease of inspection.
- **Advanced on-board computer**
  Stores power and hydraulic preference settings for up to 350 different users.
- **Built-in Li-ion battery (option)**
  Fast opportune charging removes the need for extra batteries and allows 24/7 operation.
- **Stability Support System (S3)**
  Hydraulic functions such as mast reach and mast tilt are automatically optimised along with a reach damping function to make pallet placement and retrieval safer and quicker.
- **S3 - 2**
  Works to adjust maximum travel speed in relation to actual load weight for the best levels of safety and performance.

FORKS AND MAST

- **MaxVision mast and overhead guard**
  These maximise operator field of vision for increased productivity and safety.
- **Level Assistance System (option)**
  This patented system detects the operator's intention and automatically stops when the forks are at precisely at the right level.
- **Mast Tilt Control (MTC)**
  The automatic damping function absorbs unwanted mast movements, reduces the speeds of tilt, side shift and angle, and ensures 80 percent faster mast stabilisation.

There is more information on RBM20-25N3 Series on mitforklift.com

For more extensive information please visit our website mitforklift.com

mft2.eu/rbmn3

RBM20-25N3 Series
4-WAY REACH TRUCKS

2.0 – 2.5 tonnes

FRAME AND BODY

- **Modular design**
  Limits the number of parts used meaning service engineers can carry fewer parts to keep the first-time fix rate incredibly high.
- **RapidAccess features**
  These allow quick and easy entry to all areas for checks and maintenance.

HYDRAULICS

- **Soft Motion**
  A finely tuned algorithm adjusts reach, tilt and sideshift speed to greatly improve productivity and handling speed.

OPERATOR COMPARTMENT AND CONTROLS

- **Electrically adjustable floor height**
  Can be adjusted to suit each operator and provide a more ergonomic seating position.
- **Weight indicator**
  Displays the load weight as well as the option to add multiple weights of up to 100kg
- **Tilting seat with ergonomic backrest**
  Drivers are kept safe, comfortable, and alert through long shifts.
- **Heated cabin (option)**
  Makes for more comfortable operation in cold environments.
- **Spacious and comfortable cabin, clear view and fast, accurate fork positioning**
  This all helps to increase productivity and reduce risks of driver fatigue - even on the longest shifts.
- **Easy-access compartment**
  Includes ergonomic hand bars, low non-slip step and wide entry to provide safe and effortless entry and exit.
- **Multifunctional Ergologic Joystick**
  This intuitive and highly ergonomic joystick controls seven different functions, including lifting, lowering, reaching and tilting.
- **Automotive-style pedals**
  Pedals are placed in a familiar position for intuitive operation.
- **PIN-code access**
  Stops unauthorised truck use and keeps you aware of who's operating at all times.
- **Optional fingertip hydraulic controls**
  Integrated, fully adjustable, and allows effortless precision.

STEERING SYSTEM

- **Mini steering wheel with floating armrest**
  Ergonomically adjustable to reduce strain and lower risk of RSI.
- **Synchronised steering mode**
  Allows for quick changes in travel direction.
- **360-degree steering**
  The operator can keep the truck in constant motion — saving seconds on every turn.
- **Midi steering wheel (option)**
  Adjustable positioning with tilt function.

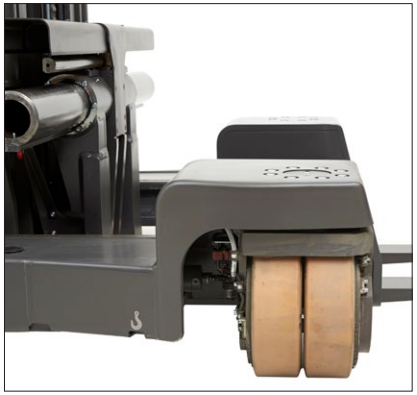

There is more information on RBM20-25N3 Series on mitforklift.com

For more extensive information please visit our website mitforklift.com

mft2.eu/rbmn3

OPTIONAL LI-ION BATTERY SYSTEMS

MAKE YOUR FORKLIFT GO EVEN FURTHER

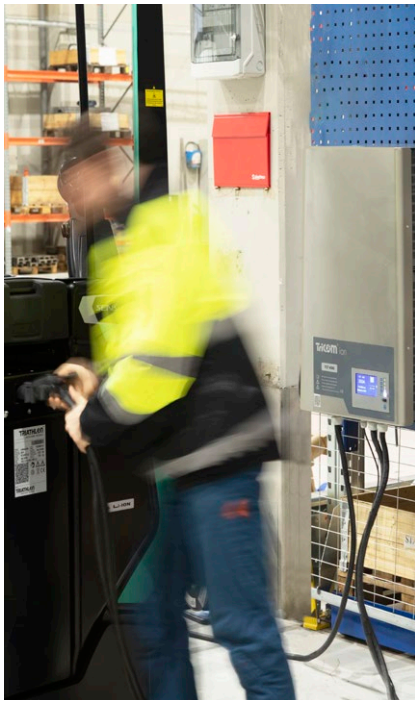

Tried, tested and proven in the field, lead-acid batteries have been the long-standing top choice for companies employing electric lift trucks. However, with long charging times, demanding maintenance requirements, the need for extra batteries and high risk of operator misuse, it can be a challenge. Fortunately, there's a new battery system on the block: Li-ion from Mitsubishi Forklift Trucks.

Designed to meet your business' demands - including multi-shift (24/7) operations - without the need for spare batteries, our high-performance Li-ion battery system is up to 30% more efficient than lead-acid counterparts. Plus, it's virtually error-proof, thanks to its ultra-low-maintenance design.

- **Gas-emission free and space efficient operation**
  with no need for air ventilation and/or closed charging room.
- **Exceptional high battery & charger efficiency**
  due to state-of-the-art technology, delivers up to 30% more power efficiency than lead-acid batteries.
- **Maintenance free design**
  Eliminates the need for daily checks and water re-fills by operator, and reduces the risk of operators damaging cells.
- **No spare batteries and charging room required**
  saves space and costs in multi-shift application to maximise profitability.
- **Quick charge capabilities**
  mean that just 15 minutes is all your battery needs to keep your truck going a few more hours. (It only takes from 1 hour to fully charge a completely discharged battery.)
- **Higher sustained voltage**
  ensures more consistent lifting and driving performance, which is particularly noticeable towards the end of a shift.
- **Active protection componentry**
  this continuously monitors the system, highlighting potential issues, including misuse.
- **High safety features include**
  Short circuit protection, deep-discharge and overcharge protection, individual cell temperature and voltage monitoring.
- **On-the-go performance and monitoring**
  is possible thanks to the system's integrated monitoring system with easy-to-read display unit.
- **Wide choice of battery and charger capacities**
  The most suitable power supply can be matched to the exact requirements of a specific application.

Fully integrated Li-ion battery

Features a sophisticated CANbus communication and an automatic ON/OFF synchronization between battery and truck. Battery level, notifications and alarms are integrated into the truck display, to secure clear and easy overview for the truck operator.

There is more information on Li-ion on mitforklift.com

For more extensive information please visit our website mitforklift.com

mft2.eu/lion

VDI - PERFORMANCE & DIMENSIONS

	CHARACTERISTICS				
1.1	Manufacturer			Mitsubishi Forklift Trucks	Mitsubishi Forklift Trucks
1.2	Manufacturer's model designation			RBM20N3	RBM25N3
1.3	Power source			Battery	Battery
1.4	Operator type			Seated	Seated
1.5	Load capacity	Q	kg	2000	2500
1.6	Load center distance	c	mm	600	600
1.8	Load wheel axle to fork face (forks lowered)	x	mm	see table	see table
1.9	Wheelbase	y	mm	1505	1665
	WEIGHT				
2.1b	Truck weight without load, with maximum battery weight		kg	4360	4960
2.3	Axle loadings with nominal load & maximum battery weight, drive / load side		kg	2550 / 1810	2880 / 2080
2.4	Axle loading, mast forward, with nominal load, drive / load side		kg	800 / 5560	660 / 6800
2.5	Axle loading, mast retracted, with nominal load, drive / load side		kg	2360 / 4000	2830 / 4630
	WHEELS, DRIVE TRAIN				
3.1	Tyres: PT = Power Thane, Vul = Vulkollan, P = Polyurethane, N = Nylon, R = Rubber drive / load side			Vul	Vul
3.2	Tyre dimensions, drive side		mm	355 x 155	355 x 155
3.3	Tyre dimensions, load side		mm	260 x 85	260 x 85
3.5	Number of wheels, load / drive side (x = driven)			2 +2 / 1x	2 + 2 / 1x
3.7	Track width (center of tyres), load side	b11	mm	1444	1444
	DIMENSIONS				
4.1	Fork tilt, forwards / backwards	∂, ß	°	1.5/3.5[9] 1/3[9] 1/1[9]	1.5/3.5[9] 1/3[9] 1/1[9]
4.2a	Height with mast lowered	h1	mm	see table	see table
4.3	Free lift	h2	mm	see table	see table
4.4	Lift height	h3	mm	see table	see table
4.5	Height with mast extended	h4	mm	see table	see table
4.7	Height to top of overhead guard	h6	mm	2215	2215
4.8	Seat- or stand height	h7	mm	1087[1]	1087[1]
4.10	Height of support legs	h8	mm	430	430
4.15	Fork height, fully lowered	h13	mm	65	65
4.19	Overall length	l1	mm	2473	2555
4.20	Length to fork face	l2	mm	1323	1405
4.21	Overall width	b1/b2	mm	1744 / 1498	1744 / 1498
4.22	Fork dimensions (thickness, width, length)	s/e/l	mm	45 / 125 / 1150	45 / 125 / 1150
4.24	Fork carriage width	b3	mm	1500 / 2170	1500 / 2170
4.25	Outside width over forks (minimum / maximum)	b5	mm	556-1546 / 2216	556-1546 / 2216
4.26	Inner width of support legs	b4	mm	903	903
4.28	Mast reach	l4	mm	704	782
4.32	Ground clearance at center of wheelbase, (forks lowered)	m2	mm	80	80
4.33a	Working aisle width (Ast) with 1000 x 1200 mm pallets, load crosswise	Ast	mm	2787	2896
4.34a	Working aisle width (Ast) with 800 x 1200 mm pallets, load lengthwise	Ast	mm	2823	2915
4.35	Turning radius	Wa	mm	1772	1932
4.37	Truck length including support legs	l7	mm	1942	2102
	PERFORMANCE				
5.1	Travel speed, with / without load		km/h	13 / 13	13 / 13
5.2	Lifting speed, with / without load		m/s	0.33 / 0.55	0.32 / 0.53
5.3	Lowering speed, with / without load		m/s	0.54 / 0.47	0.53 / 0.53
5.5	Rated drawbar pull, with / without load		N	0.2 / 0.2	0.2 / 0.2
5.8	Maximum gradeability with / without load		%	10 / 15	9 / 14
5.9	Acceleration time (10 metres) with / without load		s	5.7 / 5.0	6.2 / 5.2
5.10	Service brakes (mechanical / hydraulic / electric / pneumatic)			Electric	Electric
	ELECTRIC MOTORS				
6.1	Drive motor capacity (60 min. short duty)		kW	7.2	7.2
6.2	Lift motor output at 15% duty factor		kW	15	15
6.4	Battery voltage/capacity at 5-hour discharge		V/Ah	48 - 465 / 620 / 775 / 930	48 - 620 / 775 / 930
6.5	Battery weight		kg	712 / 892 /1063 / 1567	892 /1063 / 1567
6.6b	Energy consumption according to VDI 60 cycle		kW / h	6	6
	MISCELLANEOUS				
8.1	Type of drive control			Stepless	Stepless
10.1	Maximum operating pressure for attachments		bar	150	150
10.2	Oil flow for attachments		l / min	25	25
10.7	Level of noise at the ear level of the driver according to EN 12 053:2001 and EN ISO 4871 in work LpAZ		dB(A)	59.7	59.7

RBM20-25N3 Series

4-WAY REACH TRUCKS

2.0 – 2.5 tonnes

1) Measured with standard seat to SIP point
9) Mast tilt

Continuing improvement may lead to changes in these specifications

MAST PERFORMANCE AND CAPACITY

RBM20-25N3 Series

MAST TYPE	h3 + h13 mm	h1 mm	h2 + h13 mm	h4 [1] mm
RBM20N3				
DTF	4350	2165	1625	4890
	4950	2365	1825	5490
	5250	2465	1925	5790
	5850	2665	2125	6390
	6300	2815	2275	6840
	6800	2982	2442	7340
	7500	3215	2675	8040
	8000	3382	2842	8540
	8500	3548	3008	9040
RBM25N3				
DTF	4500	2365	1825	5040
	4800	2465	1925	5340
	5400	2665	2125	5940
	5850	2815	2275	6390
	6350	2982	2442	6890
	7050	3215	2675	7590
	7550	3382	2842	8090
	8050	3548	3008	8590
	8500	3698	3158	9040
	9000	3865	3325	9540
	9350	3982	3442	9890
	9700	4128	3588	10240

MODEL	BATTERY CAPACITY	BATTERY WEIGHT	1.8 x
	Ah	kg	mm
RB16N3	465	708	449
	620	892	377
	775	1063	305
	930	1240	233
RB20N3H	620	892	527
	775	1063	445
	930	1240	383

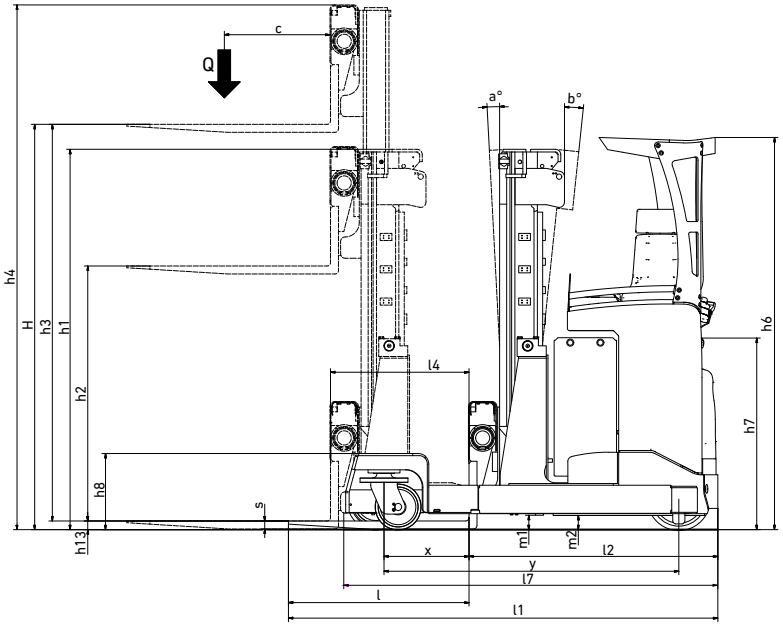

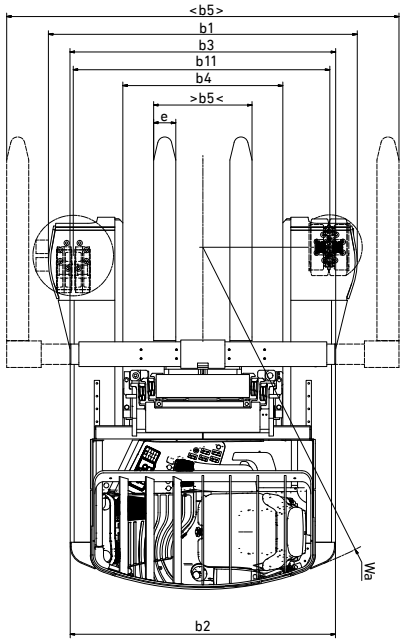

h3+h13 = Lifting height
h1 = Lowered mast height
h2+h13 = Free lift
h4 = Raised mast height

Ast = Working aisle width with load
Ast = Wa + R + a
Ast3 = Working aisle width (b12<1000 mm)
Ast3 = Wa + l6 -x +a
Wa = Turning radius
R = $\sqrt{(l6 + x)^2 + (b12 / 2 - b13)^2}$
a = Safety clearance = 2 x 100 mm
l6 = Pallet length (1200 mm)
x = Load wheel axle to fork face
b12 = Pallet width (800 or 1000 mm)
Q = Lifting capacity, rated load
c = Load centre (distance)

STANDARD EQUIPMENT & OPTIONS

RBM20-25N3 Series

4-WAY REACH TRUCKS

2.0 – 2.5 tonnes

● = Standard
● = Option

	RBM20N3	RBM25N3
GENERAL		
Automatic electric parking brake	●	●
Steering wheel angle indicator	●	●
Battery indicator with cut out at 20% remaining battery level	●	●
ATC 3 truck computer with display and keyboard	●	●
Integrated sideshift DTFV mast	●	●
Electric adjustable floor height	●	●
Suspension seat with weight-controlled tilting high backrest	●	●
Chill store design, down to +1° Celsius	●	●
Paper storage and cup holder	●	●
Battery reach out	●	●
Battery on rollers	●	●
Motor power battery bed	-	●
Other RAL-colour	●	●
POWER SOURCE		
Li-ion battery*	●	●
Lead-acid battery	●	●
Battery cover plate	●	●
MAST, FORKS AND CARRIAGE		
Tilting mast	●	●
Integral fork positioner 560 - 1550mm	●	●
Manual fork positioner 560 - 1550mm	●	●
Manual fork positioner 560 - 2220mm	●	●
Fork safe zone system	●	●
Mast Tilt Control, MTC (std @ lift height > 7,2 m, Option < 7,2 m)	●	●
Lift stop with-/without restart	●	●
Lift height indicator (std in S3-2 Increased performance)	●	●
Level selector	●	●
Level assistance system, LAS	●	●
Load weight indicator (std in S3-2 Increased performance)	●	●
Reverse travel camera	●	●
Horizontal forks	●	●
S3 - Stability Support System with Soft Motion	●	●

* Li-ion battery option is available in selected regions.
Li-ion battery option not in combination with cold store design, 0C° to -35C°.

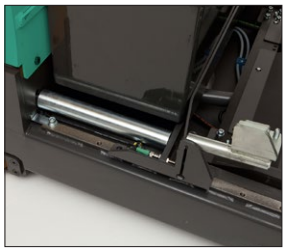

Battery on rollers

Ergologic Joystick

Midi steering wheel

Blue point safety light

Panoramic MaxVision roof

Headrest for seat

STANDARD EQUIPMENT & OPTIONS

RBM20-25N3 Series

4-WAY REACH TRUCKS

2.0 – 2.5 tonnes

● = Standard
● = Option

	RBM20N3	RBM25N3
DRIVE AND LIFT CONTROLS		
Electric power mini steering in floating armrest	●	●
360-degree steering	●	●
Active Spin Reduction	●	●
Intelligent Cornering System (ICS)	●	●
Hand-operated direction control	●	●
Ergologic Joystick	●	●
Fingertip controls	●	●
Midi steering wheel	●	●
Key switch entry	●	●
Creep speed at preset level 500 mm	●	●
Creep speed at other levels	●	●
Impact sensors with display warning and horn	●	●
Impact sensors with display warning, horn and warning light on overhead guard	●	●
S3-2 Increased performance	●	●
ELECTRIC		
Blue / Red point safety light, towards driving direction	●	●
Automatic logoff	●	●
Working lights LED	●	●
Working lights LED for cabin	●	●
Warning light on the roof	●	●
Warning light for heated cabin	●	●
12 V connector	●	●
Converter 48 - 12 V	●	●
Radio with MP3	●	●
Service alarm	●	●
OHG AND CABIN		
Heated cabin**	●	●
Window opening in cabin door	●	●
2-way intercom for cold store cabin	●	●
Panoramic MaxVision roof	●	●
Mesh metal on overhead guard	●	●
Heated seat – fabric	●	●
Heated seat – PVC	●	●
Headrest for seat	●	●
Rear view mirror	●	●
Writing desk	●	●
Equipment holder, RAM system size C	●	●
Equipment holder, RAM system size C, 2 pcs	●	●
Equipment holder, RAM system size D	●	●
WHEEL OPTIONS		
Vulkolan® traction wheel 95 Shore	●	●
Tractothan® traction wheel 93 Shore	●	●
ENVIRONMENT		
Cold store design, 0C° to -35C°**	●	●

** Not in combination with Li-ion battery

Continuing improvement may lead to changes in these specifications

WHEN RELIABILITY IS EVERYTHING...

Like any product bearing the "MITSUBISHI" name our materials handling equipment benefits from the tremendous heritage, huge resources and cutting-edge technology of one of the world's largest corporations – Mitsubishi Heavy Industries Group.

Engineering spacecraft, jet planes, power plants and more, MHI specialises in those technologies where performance, dependability and superiority decide your success or failure...

So when we promise you quality, reliability and value for money, you know it's a guarantee we have the power to deliver.

That's why every model in our award-winning and comprehensive range of lift trucks and warehouse equipment is built to a high specification – to ensure it keeps working for you. Day after day. Year after year. Whatever the job. Whatever the conditions.

YOU'LL NEVER WORK ALONE

As your local authorised dealer, we are here to keep your trucks working – through our extensive experience, our technical excellence and our commitment to customer care.

We are your local experts, backed by efficient channels to the entire organisation of Mitsubishi Forklift Trucks.

No matter where you are, we are close by – with the capability to meet your needs.

Discover how Mitsubishi Forklift Trucks give you more from your local authorised dealer or when you visit our website www.mitforklift.com

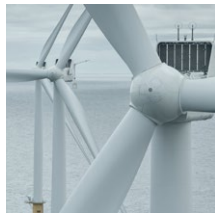

Performance specifications may vary depending on standard manufacturing tolerances, vehicle condition, types of tyres, floor or surface conditions, applications or operating environment. Trucks may be shown with non-standard options. Specific performance requirements and locally available configurations should be discussed with your distributor of Mitsubishi forklift trucks. We follow a policy of continual product improvement. For this reason, some materials, options and specifications could change without notice.

info@mitforklift.com

WESM2117 (04/21) © 2021 MLE

Mitsubishi Logisnext Europe B.V.
Hefbrugweg 77, 1332 AM Almere
The Netherlands
Tel: +31 (0)36 5494 411

MITSUBISHI FORKLIFT BRIEFING
mft2.eu/fb

App Store
Google Play
mft2.eu/apps

YouTube
mft2.eu/youtube

mft2.eu/facebook

MITSUBISHI FORKLIFT TRUCKS