PRELIMINARY
SPECIFICATIONS

MOVE THE WORLD FORWARD MITSUBISHI HEAVY INDUSTRIES GROUP

SENSiA ES

RB14-16N2L Series

LIGHT REACH TRUCKS

1.4 - 1.6 tonnes

TOUGH ON THE OUTSIDE...
CLEVER ON THE INSIDE

A truck is only as good as its driver, that's why the SENSiA ES – like all SENSiA reach trucks – works intuitively to help your operators work to their full potential.

SPECIFICATIONS

RB14N2L
RB16N2L

WHEN RELIABILITY IS EVERYTHING...

MITSUBISHI FORKLIFT TRUCKS

SENSiA ES

RB14-16N2L Series

LIGHT REACH TRUCKS

1.4 – 1.6 tonnes

The ES is built on the same innovative technologies that drive other SENSiA models, while opening up the award-winning SENSiA reach truck range to an even wider array of businesses. These entry-level trucks are designed for light and medium applications at heights of up to 7.5m without compromising on the quality and performance that are hallmarks of the SENSiA family.

A choice of performance modes means that whether the most experienced or inexperienced driver sets foot in the award-winning SENSiA cabin, they will quickly and easily be able to configure the truck to their level. New users can select ECO mode, which provides natural, measured handling and extended shift lift, whereas those far more familiar with the work can switch to PRO mode and benefit from enhanced performance. While these are a starting point, service engineers will be able to quickly customise the truck further for any more specific needs.

BRAKES

- **High-efficiency regenerative braking**
  This gives more effective control and reduces brake wear.
- **Load wheel brakes (option)**
  These provide extra braking power.

DRIVE

- **Powerful AC drive motor**
  High torque, even at faster speeds. Efficient, smooth, and quiet performance which lowers service costs.
- **Choice of two operation modes (ECO and PRO)**
  The truck's performance can be tailored for enhanced performance or extended shift life.
- **High-efficiency drive motors and hydraulic systems**
  Exceptional shift length between charges or changes.
- **Cornering control**
  Even at fast travel speeds cornering is efficient and stable.
- **Mitsubishi SDS (Sensitive Drive System)**
  An intuitive driver-assist system for increased safety. Performance is managemed according to steer angle and the velocity of foot and finger controls.

ELECTRICAL AND CONTROL SYSTEMS

- **CAN bus system**
  Less wiring for quick and easy fault finding.
- **Maintenance interval calculator**
  This helps to encourage correct regular servicing to minimise potential downtime.
- **Temperature control**
  This prevents motors and controllers from sustaining damage from overheating.
- **Tilting battery cover**
  Quick, easy access for maintenance and charging.
- **Battery rollers**
  Changes are quick, easy and safe.

FORKS AND MAST

- **Passive Sway Control**
  The chassis moves slightly to compensate for elevated load motion and dampen it.
- **Clear-view fork carriage**
  This has integral side-shift and offers optimal visibility of forks at the first stacking level.
- **1070mm support legs**
  Operator can easily control pallets and loads are kept safe.

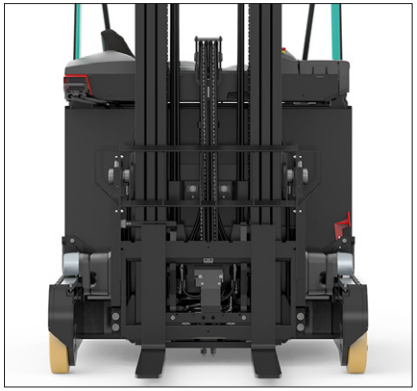

There is more information on SENSiA ES on mitforklift.com

For more extensive information please visit our website mitforklift.com

mft2.eu/sensiaes

Continuing improvement may lead to changes in these specifications

SENSiA ES

RB14-16N2L Series

LIGHT REACH TRUCKS

1.4 – 1.6 tonnes

FRAME AND BODY

- **Clear-view overhead guard**
  Great visibility while still offering high levels of overhead protection.

HYDRAULICS

- **Powerful AC hydraulic motor**
  Lifting and lowering is fast and controlled.

OPERATOR COMPARTMENT AND CONTROLS

- **Spacious and comfortable cabin, clear view and fast, accurate fork positioning**
  This all helps to increase productivity and reduce risks of driver fatigue - even on the longest shifts.
- **Easy-access compartment**
  This features ergonomic hand bars, low non-slip step and entry provides safe and effortless entry and exit.
- **Folding steering wheel console**
  Length and angle of column are adjustable to give each operator the optimal driving position. Lifts up for easy exit and entry of the cabin.
- **Multifunctional armrest controls**
  Operators' arm is well supported and cuts down on unnecessary movement. Controls for reach, lift, tilt, fork positioning, direction and horn all within easy reach.
- **Full-suspension, fully adjustable seat**
  Drivers are kept safe, comfortable, and alert through long shifts.
- **Clear information display**
  The driver is given key information such as guidance, warning, and alarms.
- **Low-noise technology**
  The sound level at the driver's ear is no louder than a typical conversation.

STEERING SYSTEM

- **Unlimited 360-degree progressive electric steering**
  Manoeuvring is easy at low speeds and offers effortless control at higher speeds.

There is more information on SENSiA ES on mitforklift.com

For more extensive information please visit our website mitforklift.com

mft2.eu/sensiaes

Continuing improvement may lead to changes in these specifications

SENSIA ES

OPTIONAL LI-ION BATTERY SYSTEMS

MAKE YOUR FORKLIFT GO EVEN FURTHER

Tried, tested and proven in the field, lead-acid batteries have been the long-standing top choice for companies employing electric lift trucks. However, with long charging times, demanding maintenance requirements, the need for extra batteries and high risk of operator misuse, it can be a challenge. Fortunately, there's a new battery system on the block: Li-ion from Mitsubishi Forklift Trucks.

Designed to meet your business' demands - including multi-shift (24/7) operations - without the need for spare batteries, our high-performance Li-ion battery system is up to 30% more efficient than lead-acid counterparts. Plus, it's virtually error-proof, thanks to its ultra-low-maintenance design.

- **Gas-emission free and space efficient operation**
  with no need for air ventilation and/or closed charging room.
- **Exceptional high battery & charger efficiency**
  due to state-of-the-art technology, delivers up to 30% more power efficiency than lead-acid batteries.
- **Maintenance free design**
  Eliminates the need for daily checks and water re-fills by operator, and reduces the risk of operators damaging cells.
- **No spare batteries and charging room required**
  saves space and costs in multi-shift application to maximise profitability.
- **Quick charge capabilities**
  mean that just 15 minutes is all your battery needs to keep your truck going a few more hours. (It only takes from 1 hour to fully charge a completely discharged battery.)
- **Higher sustained voltage**
  ensures more consistent lifting and driving performance, which is particularly noticeable towards the end of a shift.
- **Active protection componentry**
  this continuously monitors the system, highlighting potential issues, including misuse.
- **High safety features include**
  Short circuit protection, deep-discharge and overcharge protection, individual cell temperature and voltage monitoring.
- **On-the-go performance and monitoring**
  is possible thanks to the system's integrated monitoring system with easy-to-read display unit.
- **Wide choice of battery and charger capacities**
  The most suitable power supply can be matched to the exact requirements of a specific application.

Fully integrated Li-ion battery

Features a sophisticated CANbus communication and an automatic ON/OFF synchronization between battery and truck. Battery level, notifications and alarms are integrated into the truck display, to secure clear and easy overview for the truck operator.

There is more information on Li-ion on mitforklift.com

For more extensive information please visit our website mitforklift.com

mft2.eu/lion

Li-ion battery option is available in selected regions.

Continuing improvement may lead to changes in these specifications

VDI - PERFORMANCE & DIMENSIONS

	CHARACTERISTICS				
1.1	Manufacturer			Mitsubishi	Mitsubishi
1.2	Manufacturer's model designation			RB14N2L	RB16N2L
1.3	Power source			Battery	Battery
1.4	Operator type			Seated	Seated
1.5	Load capacity	Q	kg	1400	1600
1.6	Load center distance	c	mm	600	600
1.8	Load wheel axle to fork face (forks lowered)	x	mm	see table	see table
1.9	Wheelbase	y	mm	1300	1300
	WEIGHT				
2.1	Truck weight without load, with maximum battery weight		kg	3421 [8]	3421 [8]
2.3	Axle loadings with nominal load & maximum battery weight, drive / load side		kg	1925 / 1496 [8]	1925/ 1496 [8]
2.4	Axle loading, mast forward, with nominal load, drive / load side		kg	496 / 4561 [8]	496/ 4561 [8]
2.5	Axle loading, mast retracted, with nominal load, drive / load side		kg	1355 / 3692 [8]	1355 / 3692 [8]
	WHEELS, DRIVE TRAIN				
3.1	Tyres: PT = Power Thane, Vul = Vulkollan, P = Polyurethane, N = Nylon, R = Rubber drive / load side			PT	PT
3.2	Tyre dimensions, drive side		mm	Ø360 x 140	Ø360 x 140
3.3	Tyre dimensions, load side		mm	Ø285 x 75	Ø285 x 75
3.5	Number of wheels, load / drive side (x = driven)			2 / 1 x	2 / 1 x
3.7	Track width (center of tyres), load side	b11	mm	1195	1195
	DIMENSIONS				
4.1	Fork tilt, forwards / backwards	∂, ß	°	2 / 4	2 / 4
4.2a	Height with mast lowered	h1	mm	see table	see table
4.3	Free lift	h2	mm	see table	see table
4.4	Lift height	h3	mm	see table	see table
4.5	Height with mast extended	h4	mm	see table	see table
4.7	Height to top of overhead guard	h6	mm	2200	2200
4.8	Seat- or stand height	h7	mm	1.030 [1]	1.030 [1]
4.10	Height of support legs	h8	mm	360	360
4.15	Fork height, fully lowered	h13	mm	85	85
4.19	Overall length	l1	mm	see table	see table
4.20	Length to fork face	l2	mm	see table	see table
4.21	Overall width	b1/b2	mm	1270	1270
4.22	Fork dimensions (thickness, width, length)	s/e/l	mm	40 / 100 / 1150	40 / 100 / 1150
4.23	Fork carriage to DIN			FEM 2A	FEM 2A
4.24	Fork carriage width	b3	mm	720	720
4.25	Outside width over forks (minimum / maximum)	b5	mm	315 - 710	315 - 710
4.26	Inner width of support legs	b4	mm	1070	1070
4.28	Mast reach	l4	mm	see table	see table
4.32	Ground clearance at center of wheelbase, (forks lowered)	m2	mm	75	75
4.33a	Working aisle width (Ast) with 1000 x 1200 mm pallets, load crosswise	Ast	mm	see table	see table
4.33b	Working aisle width (Ast3) with 1000 x 1200 mm pallets, load crosswise	Ast3	mm	see table	see table
4.34a	Working aisle width (Ast) with 800 x 1200 mm pallets, load lengthwise	Ast	mm	see table	see table
4.34b	Working aisle width (Ast3) with 800 x 1200 mm pallets, load lengthwise	Ast3	mm	see table	see table
4.35	Turning radius	Wa	mm	see table	see table
4.37	Truck length including support legs	l7	mm	1693	1693
	PERFORMANCE				
5.1	Travel speed, with / without load		km/h	12 / 12 [4]	12 / 12 [4]
5.2	Lifting speed, with / without load		m/s	0.4 / 0.65	0.4 / 0.65
5.3	Lowering speed, with / without load		m/s	0.55 / 0.5	0.55 / 0.5
5.8	Maximum gradeability with / without load		%	10 / 15	10 / 15
5.9	Acceleration time (10 metres) with / without load		s	5.0 / 4.5	5.0 / 4.5
5.10	Service brakes (mechanical / hydraulic / electric / pneumatic)			Electric	Electric
	ELECTRIC MOTORS				
6.1	Drive motor capacity (60 min. short duty)		kW	7.5	7.5
6.2	Lift motor output at 15% duty factor		kW	10	10
6.4	Battery voltage/capacity at 5-hour discharge		V/Ah	48- 465 / 620 / 775	48-465 / 620 / 775
6.5	Battery weight		kg	700 / 900 / 1100	700 / 900 / 1100
	MISCELLANEOUS				
8.1	Type of drive control			Stepless	Stepless
10.7	Level of noise at the ear level of the driver according to EN 12 053:2001 and EN ISO 4871 in work LpAZ		dB(A)	67 [2]	67 [2]
10.7.1	Level of noise at the ear level of the driver according to EN 12 053:2001 and EN ISO 4871, drive/lift/idle LpAZ		dB(A)	58 / 73 / 50 [2]	58 / 73 / 50 [2]
10.7.2	Whole-body vibration (EN 13 059:2002)			0.31 [3]	0.31 [3]
10.7.3	Hand-arm vibration (EN 13 059:2002)			< 2.5 [3]	< 2.5 [3]

SENSIA ES

RB14-16N2L Series

LIGHT REACH TRUCKS

1.4 – 1.6 tonnes

RB14 / 16N2L

1) Measured with standard seat to SIP point
2) Inaccuracy of 4dB (A)
3) Body tremble measured with air pressured seat
4) Max drive speed to fork direction 9 km / h
8) Weight values measured with 7500mm lift height mast & 620Ah battery

Continuing improvement may lead to changes in these specifications

MAST PERFORMANCE AND CAPACITY

SENSIA ES

RB14-16N2L Series

RB14N2L / RB16N2L				
	h3 + h13 mm	h1 mm	h2 + h13 mm	h4 [1] mm
MAST	4800	2110	1700	5625
	5400	2310	1900	6225
	5700	2410	2000	6525
	5900	2480	2070	6725
	6300	2640	2230	7125
	7000	2940	2530	7825
	7500	3110	2700	8325

MODEL	BATTERY CAPACITY	BATTERY WEIGHT	4.33a AST	4.33b AST3	4.34a AST	4.34b AST3	4.28 L4	4.20 L2	4.19 L1	1.8 x	4.35 Wa
	Ah	kg	mm	mm	mm	mm	mm	mm	mm	mm	mm
RB14 / 16N2L	465	700	2695	2480	2762	2680	463	1264	2414	271	1551
	620	900	2752	2552	2829	2752	391	1336	2486	199	1551
	775	1100	2810	2624	2896	2824	319	1408	2558	127	1551

1) Including load backrest

h3+h13 = Lifting height
h1 = Lowered mast height
h2+h13 = Free lift
h4 = Raised mast height

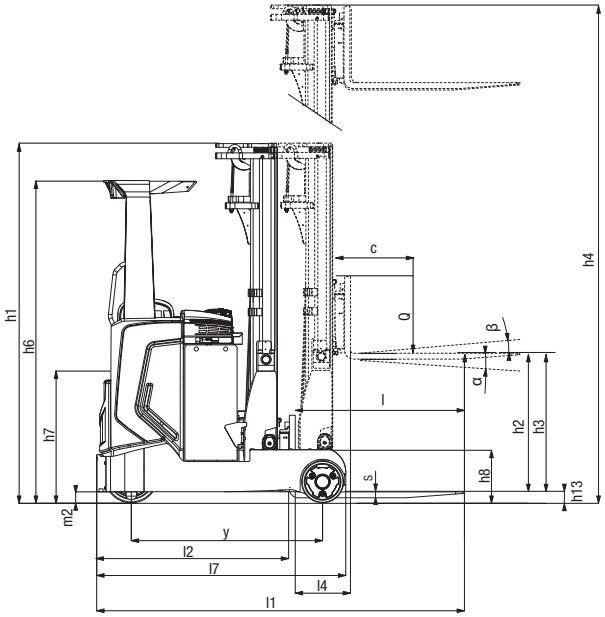

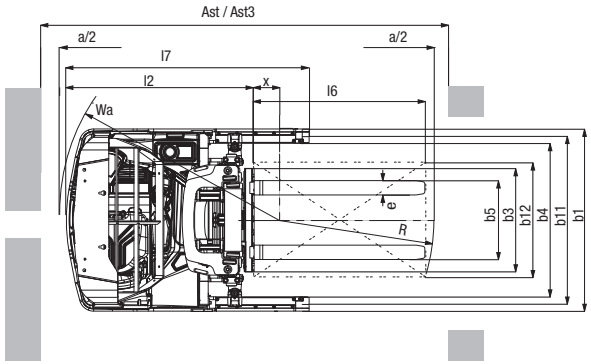

Ast = Working aisle width with load
Ast = Wa + R + a
Ast3 = Working aisle width (b12<1000 mm)
Ast3 = Wa + l6 -x +a
Wa = Turning radius
R = $\sqrt{(l6 + x)^2 + (b12 / 2 - b13)^2}$
a = Safety clearance = 2 x 100 mm
l6 = Pallet lenght (1200 mm)
x = Load wheel axle to fork face
b12 = Pallet width (800 or 1000 mm)
Q = Lifting capacity, rated load
c = Load centre (distance)

STANDARD EQUIPMENT & OPTIONS

● = Standard
● = Option

	RB14N2L	RB16N2L
GENERAL		
Operator selectable economy or high performance modes ECO/PRO	●	●
Multifunctional color display (Hour-meter, BDI, Drive speed, time & date display)	●	●
Load weight indicator	●	●
Lift hydraulic and drive interlock / PDS	●	●
Integrated sideshift and tilt fork carriage	●	●
360 degree steering with fully adjustable steering column	●	●
Drive speed limitation according to lift height	●	●
Load wheel brakes	●	●
SST - Seat Switch Timeout: all functions are disabled, truck enters "stop mode" and park brake is automatic enabled	●	●
Trucktool setup and diagnostics	●	●
Lateral battery change, chassis integrated roller bed	●	●
POWER SOURCE		
Li-ion battery*	●	●
Lead-acid battery	●	●
MAST, FORKS AND CARRIAGE		
Load backrest	●	●
Load weight indicator in 25kg increments	●	●
Passive sway control for mast	●	●
DRIVE AND LIFT CONTROLS		
Variable speed control on all hydraulic controls	●	●
Curve control	●	●
Armrest direction control	●	●
Automatic sideshift and tilt centering via the F2 button on fingertip controller	●	●
Electric load wheel brakes	●	●

* Li-ion battery option is available in selected regions.

SENSIA ES

RB14-16N2L Series

REACH TRUCKS

1.4 – 1.6 tonnes

Multifunctional color display

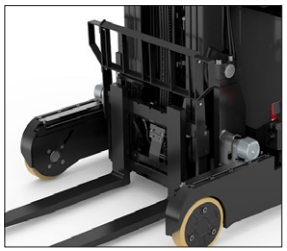

Load backrest

Li-ion battery*

STANDARD EQUIPMENT & OPTIONS

● = Standard
● = Option

	RB14N2L	RB16N2L
ELECTRIC		
Blue point safety light, towards driving direction	●	●
Drive light LED	●	●
Working lights LED, mounted on mast towards fork direction	●	●
Warning light (yellow) on the roof	●	●
Drive alarm	●	●
Pin code access	●	●
Current output 12V, 4.5A including 5V USB connector	●	●
24V, 12.5A power supply for accessories	●	●
Audio system, incl. speakers, 3.5mm jack connector	●	●
OHG AND CABIN		
Grammer MSG20 cloth seat	●	●
Grammer MSG65 cloth seat with seat belt	●	●
Grammer MSG75 cloth seat with Air suspension, armrest, backrest vextension and seat belt	●	●
Rear view mirror, wide view	●	●
Plexi or steel net roof cover	●	●
Fire extinguisher	●	●
Acessory rack	●	●
A4 list bracket	●	●
Computer bracket	●	●
WHEEL OPTIONS		
"Powerthane" polyurethan traction and load wheels	●	●
"Vulkollan" polyurethan traction and load wheels for high load weights	●	●
Power friction traction wheel	●	●
Anti static wheel set	●	●
ENVIRONMENT		
Hot storage modification > 40C°	●	●

* Li-ion battery option is available in selected regions.

SENSIA ES

RB14-16N2L Series

REACH TRUCKS

1.4 – 1.6 tonnes

Blue point safety light

Working lights LED

Grammer seat with seatbelt

Rear view mirror, A4 list bracket

WHEN RELIABILITY IS EVERYTHING...

SENSiA

TOTAL DRIVER CONTROL

Instant driveability, thanks to custom performance modes, means our SENSiA reach truck offers class leading performance... in any workplace.

With a wealth of smart design features, including revolutionary fingertip controls, sway control systems and 360-degree visibility, SENSiA provides operators unparalleled comfort, unrivalled support ... and absolute control.

Like any product bearing the "MITSUBISHI" name our materials handling equipment benefits from the tremendous heritage, huge resources and cutting-edge technology of one of the world's largest corporations – Mitsubishi Heavy Industries Group.

Engineering spacecraft, jet planes, power plants and more, MHI specialises in those technologies where performance, dependability and superiority decide your success or failure...

So when we promise you quality, reliability and value for money, you know it's a guarantee we have the power to deliver.

That's why every model in our award-winning and comprehensive range of lift trucks and warehouse equipment is built to a high specification – to ensure it keeps working for you. Day after day. Year after year. Whatever the job. Whatever the conditions.

YOU'LL NEVER WORK ALONE

As your local authorised dealer, we are here to keep your trucks working – through our extensive experience, our technical excellence and our commitment to customer care.

We are your local experts, backed by efficient channels to the entire organisation of Mitsubishi Forklift Trucks.

No matter where you are, we are close by – with the capability to meet your needs.

Discover how Mitsubishi Forklift Trucks give you more from your local authorised dealer or when you visit our website www.mitforklift.com

Performance specifications may vary depending on standard manufacturing tolerances, vehicle condition, types of tyres, floor or surface conditions, applications or operating environment. Trucks may be shown with non-standard options. Specific performance requirements and locally available configurations should be discussed with your distributor of Mitsubishi forklift trucks. We follow a policy of continual product improvement. For this reason, some materials, options and specifications could change without notice.

info@mitforklift.com

WESM2075 (11/20) © 2020 MLE

Mitsubishi Logisnext Europe B.V.
Hefbrugweg 77, 1332 AM Almere
The Netherlands
Tel: +31 (0)36 5494 411

MITSUBISHI FORKLIFT BRIEFING

mft2.eu/fb

App Store
Google Play

mft2.eu/apps

YouTube

mft2.eu/youtube

mft2.eu/facebook

MITSUBISHI FORKLIFT TRUCKS