MOVE THE WORLD FORWARD MITSUBISHI HEAVY INDUSTRIES GROUP

VELiA ES

OPB12-25N2(X)(F)(P) Series

LOW LEVEL ORDER PICKERS

1.2 – 2.5 tonnes

EMPOWER YOUR OPERATOR... TRANSFORM YOUR OPERATIONS

Despite its ultra-compact size, our VELiA ES range of low level order pickers is packed with smart features that will have your operations running more efficiently, productively and reliably. Oh, and safer, too.

SPEC SHEET

OPB12N2F	OPB20N2P
OPB12N2FP	OPB25N2P
OPB20N2	OPB20N2X
OPB25N2	OPB20N2XP

WHEN RELIABILITY IS EVERYTHING...

MITSUBISHI FORKLIFT TRUCKS

VELiA ES

OPB12-25N2(X)(F)(P) Series

LOW LEVEL ORDER PICKERS

1.2 – 2.5 tonnes

Its energy efficiency is top of its class. It's 14% more efficient than its closest competitor meaning you can work as leanly as possible. And its market-leading ergonomics mean your operators will be as comfortable and productive as possible – even through the longest shifts.

But, if that weren't enough, at the heart of every VELiA ES model is hyper-intelligent software that moulds the truck's behaviour to your operator and your operations for performance that is consistently easier, steadier and safer.

With drive speeds of up to 13 km/h, VELiA ES is sure to pick up the pace of your operations... whichever model you choose (standard, rising platform [P], rising fork [F] and scissor lift [X]).

DRIVE

- **Class-leading energy efficiency** (14% lower than nearest competitor) ensures running costs are kept to a minimum.
- **Powerful drive motor** provides excellent traction and adjustable acceleration, deceleration and brake force, for smooth, quiet, controlled operation, extended shift length and lower maintenance requirements.
- **Sensitive Drive System (SDS)** senses faster or slower operator control movements and adjusts truck performance accordingly, contributing to safety and driver performance.
- **Adaptive steering system** ensures truck performance matches operator needs – whether travelling in reverse or at speed – for calm, smooth and precise operations.

OPERATOR ENVIRONMENT AND CONTROLS

- **Flying start technology** shortens acceleration time for ultimate picking productivity.
- **Super-grip floor** is non-slip ensuring operators are safe, for confident operations.
- **Triple-suspension floating floor** with sideways dampening and advanced cushioning, reduces microvibrations for exceptional operator comfort.
- **Perfectly-angled footrest** ensures optimal positioning of foot and ankle for drivers of all heights.
- **Easy-access platform** features low step height and chamfered edges – minimising trip hazards for easy on/off access.
- **Next generation Maxius steering wheel** absorbs vibrations and shocks to ensure class-leading ergonomics.
- **Optional clear colour display** alerts operators and service engineers to potential problems: avoiding damage, while enhancing safety and encouraging good maintenance.
- **Rising operator platform** lifts to 1000 mm for picking heights of up to 2.5 m - minimising stretching and straining for operators [P models only].

FORKS

- **Bevelled easy-entry forks** offer effortless pallet entry: reducing time and risk of pallet damage for increased efficiency.
- **Choice of long forks** ensures scissor lift models can carry up to four rollcages at once for increased efficiency. [X models only].

FRAME AND BODY

- **Robust design** benefits from extensive testing – including safety certification – for lower service costs and enhanced safety.
- **Class-leading lift height** – up to 220 mm – offers high ground clearance for easy and safe handling on loading docks and ramps [Standard models].

ELECTRICAL AND CONTROL SYSTEMS

- **Full electronic steering** with no steering wheel kickback gives precise control for optimum productivity, efficiency and safety.

STEERING SYSTEM

- **Small turning circle** together with responsive steering and compact chassis allows exceptional manoeuvrability.
- **Advanced electric steering** allows precise control at speed, with automatic speed reduction in curves and automatic drive wheel centring.
- **100-degree steering angle** ensures exceptional manoeuvrability – even in tight spaces.

BRAKES

- **Regenerative braking** with no drive wheel jamming or brake wear gives effective control and excellent energy efficiency.
- **Anti-lock brakes** ensure safe stopping – even on slippery surfaces – for ultimate safety.

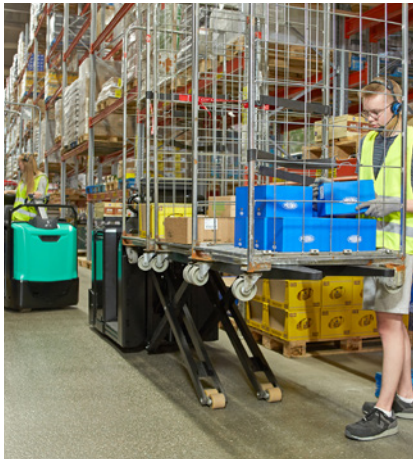

There is more information on VELiA ES on mitforklift.com

For more extensive information please visit our website mitforklift.com

mft2.eu/veliaes

Continuing improvement may lead to changes in these specifications

VELIA ES

OPTIONAL LI-ION BATTERY SYSTEMS

MAKE YOUR FORKLIFT (AND ITS FUEL) GO EVEN FURTHER

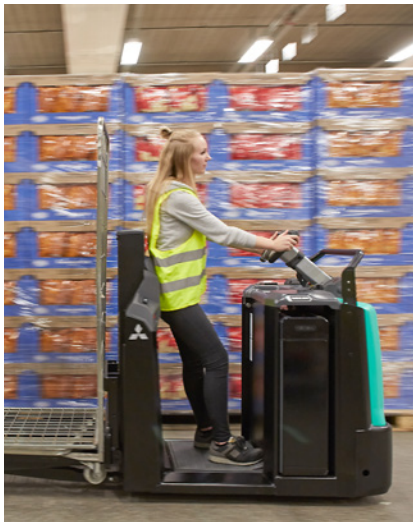

Tried, tested and proven in the field, lead-acid batteries have been the long-standing top choice for companies employing electric lift trucks. However, with long charging times, demanding maintenance requirements, the need for extra batteries and high risk of operator misuse, it can be a challenge. Fortunately, there's a new battery system on the block: Li-ion from Mitsubishi Forklift Trucks.

Designed to meet your business' demands - including multi-shift (24/7) operations - without the need for spare batteries, our high-performance Li-ion battery system is up to 40 per cent more efficient than lead-acid counterparts. Plus, it's virtually error-proof, thanks to its ultra-low-maintenance design which prevent cell damage.

- **Exceptional, zero-emissions efficiency** 40% more efficient than lead-acid batteries and free from gases.
- **Ultra-low maintenance design** demands just a full charge each week to activate cell balancing, as well as an annual CSV export/update.
- **No space required** with no need for charging areas, there's no cost to set up and you can keep your profitable space just that: profitable.
- **Quick charge capabilities** mean that just 15 minutes is all your battery needs to keep your truck going a few more hours. (It only takes 1 to 2 hours to fully charge a completely discharged battery.)
- **Higher sustained voltage** ensures more consistent lifting and driving performance, which is particularly noticeable towards the end of a shift.
- **TriCOM Technology** delivers exceptionally high system efficiency (up to 97%).
- **Water-free design** With no water in the battery and no need to top up, there's no risk of operators damaging cells.
- **Active protection componentry** This continuously monitors the system, highlighting potential issues, including misuse.
- **Short circuit protection** is offered by system safeguards including: deep-discharge and overcharge protection, individual cell temperature and voltage monitoring.
- **On-the-go performance and monitoring** is possible thanks to the system's integrated monitoring system with easy-to-read display unit, as well as an opportunity charger on board.

Battery capacity, Ah	208	312
Charger capacity, Ah 1 hour	100	300

There is more information on Li-ion on mitforklift.com

For more extensive information please visit our website mitforklift.com

mft2.eu/lion

VDI - PERFORMANCE & DIMENSIONS

VELIA ES

LOW LEVEL ORDER PICKERS

OPB20N2 / 25N2

STANDARD MODEL

2.0 – 2.5 tonnes

	CHARACTERISTICS				
1.1	Manufacturer			Mitsubishi	Mitsubishi
1.2	Manufacturer's model designation			OPB20N2	OPB25N2
1.3	Power source			Battery	Battery
1.4	Operator type			Stand-on	Stand-on
1.5	Load capacity	Q	kg	2000	2500
1.6	Load center distance	c	mm	600	600
1.8	Load wheel axle to fork face (forks lowered)	x	mm	960	960
1.9	Wheelbase	y	mm	2054 [5]	2054 [5]
	WEIGHT				
2.1	Truck weight without load, with maximum battery weight		kg	1079 [1]	1079 [1]
2.2	Axle loadings with nominal load & maximum battery weight, drive/load side		kg	1082 /1997	1178 / 2401
2.3	Axle loadings without load & with maximum battery weight, drive/load side		kg	829 / 250	829 / 250
	WHEELS, DRIVE TRAIN				
3.1	Tyres: PT=Power Thane, Vul=Vulkollan, P=Polyurethane, N=Nylon, R=Rubber drive/load side			Vul / Vul	Vul / Vul
3.2	Tyre dimensions, drive side		mm	ø250	ø250
3.3	Tyre dimensions, load side		mm	ø85	ø85
3.4	Castor wheel dimensions (diameter × width)		mm	ø180 × 65	ø180 × 65
3.5	Number of wheels, load/drive side (x=driven)			4 / 1x1	4 / 1x1
3.6	Track width (center of tyres), drive side	b10	mm	494	494
3.7	Track width (center of tyres), load side	b11	mm	365	365
	DIMENSIONS				
4.2a	Height with mast lowered	h1	mm	1173	1173
4.4	Lift height	h3	mm	135	135
4.5	Height with mast extended	h4	mm	-	-
4.8	Seat- or stand height	h7	mm	123	123
4.14	Platform height, raised	h12	mm	-	-
4.15	Fork height, fully lowered	h13	mm	85	85
4.19	Overall length	l1	mm	2421 [5]	2421 [5]
4.20	Length to fork face	l2	mm	1271 [5]	1271 [5]
4.21	Overall width	b1/b2	mm	800	800
4.22	Fork dimensions (thickness, width, length)	s / e / l	mm	60 / 175 / 900-3600	60 / 175 / 900-3600
4.25	Outside width over forks (minimum / maximum)	b5	mm	480 / 660	480 / 660
4.32	Ground clearance at center of wheelbase, (forks lowered)	m2	mm	25	25
4.34a	Working aisle width (Ast) with 800 × 1200 mm pallets, load lengthwise	Ast	mm	2898 [5]	2898 [5]
4.35	Turning radius	Wa	mm	2231 [5]	2231 [5]
	PERFORMANCE				
5.1	Travel speed, with / without load		km/h	9.0 / 9.0 (opt 9 / 13)	9.0 / 13.0
5.2	Lifting speed, with / without load		m/s	0.04 / 0.05	0.03 / 0.05
5.3	Lowering speed, with / without load		m/s	0.05 / 0.03	0.05 / 0.03
5.7	Gradeability, with / without load		%	7 / 15	7 / 15
5.10	Service brake			Electric	Electric
	ELECTRIC MOTORS				
6.1	Drive motor capacity (60 min. short duty)		kW	2.6	2.6
6.2	Lift motor output at 15% duty factor		kW	1.2	1.2
6.4	Battery voltage/capacity at 5-hour discharge		V/Ah	24 / 465-620	24 / 465-620
6.5	Battery weight		kg	355-493	355-493
6.6a	Energy consumption according to EN 16796		kWh/h	0.37	0.4
	MISCELLANEOUS				
8.1	Type of drive control			Stepless	Stepless
10.7	Level of noise at the ear level of the driver according to EN 12 053:2001 and EN ISO 4871 in work LpAZ		dB(A)	62 [3]	62 [3]
10.7.1	Level of noise at the ear level of the driver according to EN 12 053:2001 and EN ISO 4871, drive/lift/idle LpAZ		dB(A)	73 / 62 / - [3]	73 / 62 / - [3]
10.7.2	Whole-body vibration (EN 13 059:2002)			0.6	0.6
10.7.3	Hand-arm vibration (EN 13 059:2002)			<2.5	<2.5

1) Forks 540 × 1150, battery 620 Ah
2) Forks 540 × 1150/ lift 1200mm, battery 620 Ah
3) Inaccuracy of 4 dB(A)
4) Fork carriage length 2375 mm
5) With 620Ah battery + 100mm

Ast = Wa - x + l6 + 200
Ast = Working aisle width
Wa = Turning radius
a = Safety clearance = 2 ×100 mm
R = $\sqrt{(l6 + x)2 + (b12 / 2)^2}$
l6 = Pallet length (800 or 1000 mm)
b12 = Pallet width (1200 mm)

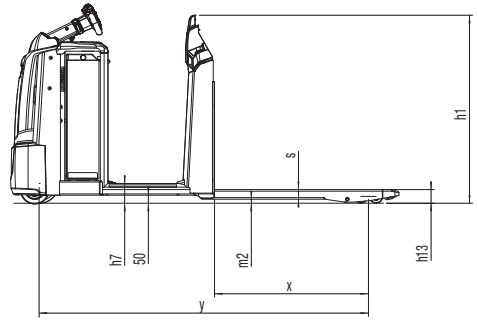

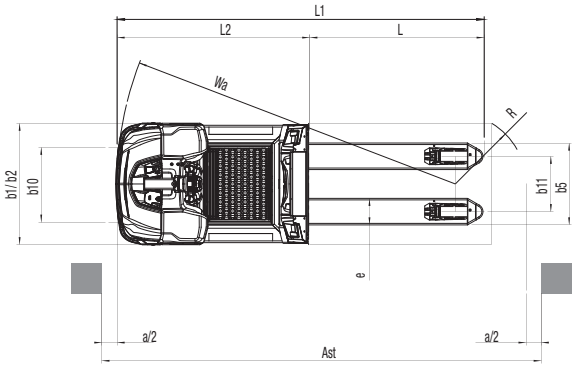

VDI - PERFORMANCE & DIMENSIONS

VELÍA ES

LOW LEVEL ORDER PICKERS

OPB20N2P / 25N2P

RISING PLATFORM MODEL

2.0 – 2.5 tonnes

	CHARACTERISTICS				
1.1	Manufacturer			Mitsubishi	Mitsubishi
1.2	Manufacturer's model designation			OPB20N2P	OPB25N2P
1.3	Power source			Battery	Battery
1.4	Operator type			Stand-on	Stand-on
1.5	Load capacity	Q	kg	2000	2500
1.6	Load center distance	c	mm	600	600
1.8	Load wheel axle to fork face (forks lowered)	x	mm	960	960
1.9	Wheelbase	y	mm	2054 [5]	2054 [5]
	WEIGHT				
2.1	Truck weight without load, with maximum battery weight		kg	1215 [1]	1215 [1]
2.2	Axle loadings with nominal load & maximum battery weight, drive/load side		kg	1130 / 2085	1223 / 2492
2.3	Axle loadings without load & with maximum battery weight, drive/load side		kg	913 / 302	913 / 302
	WHEELS, DRIVE TRAIN				
3.1	Tyres: PT=Power Thane, Vul=Vulkollan, P=Polyurethane, N=Nylon, R=Rubber drive/load side			Vul/ Vul	Vul/ Vul
3.2	Tyre dimensions, drive side		mm	ø250	ø250
3.3	Tyre dimensions, load side		mm	ø85	ø85
3.4	Castor wheel dimensions (diameter × width)		mm	ø180 × 65	ø180 × 65
3.5	Number of wheels, load/drive side (x=driven)			4 / 1x1	4 / 1x1
3.6	Track width (center of tyres), drive side	b10	mm	494	494
3.7	Track width (center of tyres), load side	b11	mm	365	365
	DIMENSIONS				
4.2a	Height with mast lowered	h1	mm	1394 / 2244	1394 / 2244
4.4	Lift height	h3	mm	135	135
4.5	Height with mast extended	h4	mm	-	-
4.8	Seat- or stand height	h7	mm	150	150
4.14	Platform height, raised	h12	mm	1000	1000
4.15	Fork height, fully lowered	h13	mm	85	85
4.19	Overall length	l1	mm	2421 [5]	2421 [5]
4.20	Length to fork face	l2	mm	1271 [5]	1271 [5]
4.21	Overall width	b1/b2	mm	800	800
4.22	Fork dimensions (thickness, width, length)	s / e / l	mm	60 / 175 / 900-3600	60 / 175 / 900-3600
4.25	Outside width over forks (minimum / maximum)	b5	mm	480 / 660	480 / 660
4.32	Ground clearance at center of wheelbase, (forks lowered)	m2	mm	25	25
4.34a	Working aisle width (Ast) with 800 × 1200 mm pallets, load lengthwise	Ast	mm	2898 [5]	2898 [5]
4.35	Turning radius	Wa	mm	2231 [5]	2231 [5]
	PERFORMANCE				
5.1	Travel speed, with / without load		km/h	9.0 / 9.0 (opt 9 / 13) [6]	9.0 / 13.0 [6]
5.2	Lifting speed, with / without load		m/s	0.04 / 0.05	0.03 / 0.05
5.3	Lowering speed, with / without load		m/s	0.05 / 0.03	0.05 / 0.03
5.7	Gradeability, with / without load		%	7 / 15	7 / 15
5.10	Service brake			Electric	Electric
	ELECTRIC MOTORS				
6.1	Drive motor capacity (60 min. short duty)		kW	2.6	2.6
6.2	Lift motor output at 15% duty factor		kW	2.2	2.2
6.4	Battery voltage/capacity at 5-hour discharge		V/Ah	24 / 465-620	24 / 465-620
6.5	Battery weight		kg	355-493	355-493
6.6a	Energy consumption according to EN 16796		kWh/h	0.37	0.4
	MISCELLANEOUS				
8.1	Type of drive control			Stepless	Stepless
10.7	Level of noise at the ear level of the driver according to EN 12 053:2001 and EN ISO 4871 in work LpAZ		dB(A)	62 [3]	62 [3]
10.7.1	Level of noise at the ear level of the driver according to EN 12 053:2001 and EN ISO 4871, drive/lift/idle LpAZ		dB(A)	73 / 62 / - [3]	73 / 62 / - [3]
10.7.2	Whole-body vibration (EN 13 059:2002)			0.6	0.6
10.7.3	Hand-arm vibration (EN 13 059:2002)			<2.5	<2.5

1) Forks 540 × 1150, battery 620 Ah
2) Forks 540 × 1150/ lift 1200mm, battery 620 Ah
3) Inaccuracy of 4 dB(A)
4) Fork carriage length 2375 mm
5) With 620Ah battery + 100mm
6) Travel speed when drivers platform >300mm 5,5km/h

Ast = Wa - x + l6 + 200
Ast = Working aisle width
Wa = Turning radius
a = Safety clearance = 2 ×100 mm
R = $\sqrt{(l6 + x)2 + (b12 / 2)^2}$
l6 = Pallet length (800 or 1000 mm)
b12 = Pallet width (1200 mm)

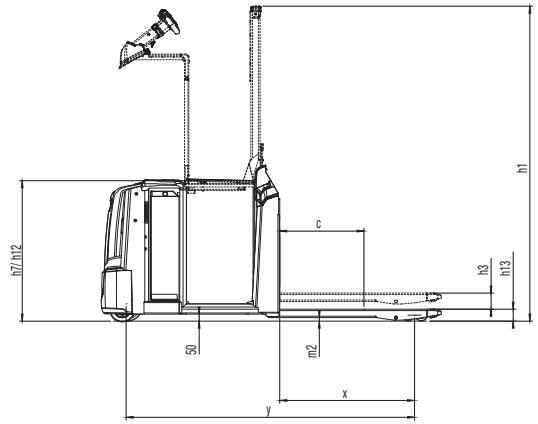

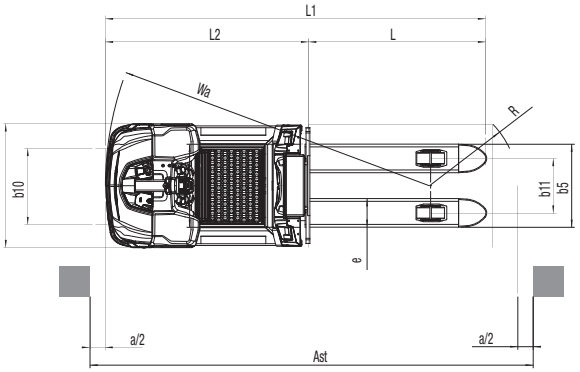

Continuing improvement may lead to changes in these specifications

VDI - PERFORMANCE & DIMENSIONS

	CHARACTERISTICS				
1.1	Manufacturer			Mitsubishi	Mitsubishi
1.2	Manufacturer's model designation			OPB20N2X	OPB20N2XP
1.3	Power source			Battery	Battery
1.4	Operator type			Stand-on	Stand-on
1.5	Load capacity	Q	kg	2000	2000
1.6	Load center distance	c	mm	1200	1200
1.8	Load wheel axle to fork face (forks lowered)	x	mm	1480	1480
1.9	Wheelbase	y	mm	2640 [5]	2640 [5]
	WEIGHT				
2.1	Truck weight without load, with maximum battery weight		kg	1333 [1]	1469 [1]
2.2	Axle loadings with nominal load & maximum battery weight, drive/load side		kg	1135 /2220	1230 / 2261
2.3	Axle loadings without load & with maximum battery weight, drive/load side		kg	929 / 404	1024 / 445
	WHEELS, DRIVE TRAIN				
3.1	Tyres: PT=Power Thane, Vul=Vulkollan, P=Polyurethane, N=Nylon, R=Rubber drive/load side			Vul / Vul	Vul / Vul
3.2	Tyre dimensions, drive side		mm	ø250	ø250
3.3	Tyre dimensions, load side		mm	ø85	ø85
3.4	Castor wheel dimensions (diameter × width)		mm	ø180 × 65	ø180 × 65
3.5	Number of wheels, load/drive side (x=driven)			4 / 1x1	4 / 1x1
3.6	Track width (center of tyres), drive side	b10	mm	494	494
3.7	Track width (center of tyres), load side	b11	mm	326 / 356	326 / 356
	DIMENSIONS				
4.2a	Height with mast lowered	h1	mm	1173	1394 / 2244
4.4	Lift height	h3	mm	765	765
4.5	Height with mast extended	h4	mm	1305	1305
4.8	Seat- or stand height	h7	mm	123	150
4.14	Platform height, raised	h12	mm	-	1000
4.15	Fork height, fully lowered	h13	mm	90	90
4.19	Overall length	l1	mm	3728 [4] [5]	3728 [4] [5]
4.20	Length to fork face	l2	mm	1353 [4] [5]	1353 [4] [5]
4.21	Overall width	b1/b2	mm	800	800
4.22	Fork dimensions (thickness, width, length)	s / e / l	mm	70 / 194 / 2375, 2850	70 / 194 / 2375, 2850
4.25	Outside width over forks (minimum / maximum)	b5	mm	520 / 550	520 / 550
4.32	Ground clearance at center of wheelbase, (forks lowered)	m2	mm	20	20
4.34a	Working aisle width (Ast) with 800 x 1200 mm pallets, load lengthwise	Ast	mm	4074 [4] [5]	4074 [4] [5]
4.35	Turning radius	Wa	mm	2833 [5]	2833 [5]
	PERFORMANCE				
5.1	Travel speed, with / without load		km/h	9.0 / 13.0	9.0 / 13.0 [6]
5.2	Lifting speed, with / without load		m/s	0.10 / 0.23	0.10 / 0.23
5.3	Lowering speed, with / without load		m/s	0.17 / 0.23	0.17 / 0.23
5.7	Gradeability, with / without load		%	7 / 15	7 / 15
5.10	Service brake			Electric	Electric
	ELECTRIC MOTORS				
6.1	Drive motor capacity (60 min. short duty)		kW	2.6	2.6
6.2	Lift motor output at 15% duty factor		kW	2.2	2.2
6.4	Battery voltage/capacity at 5-hour discharge		V/Ah	24 / 465-620	24 / 465-620
6.5	Battery weight		kg	355-493	355-493
6.6a	Energy consumption according to EN 16796		kWh/h	0.44	0.44
	MISCELLANEOUS				
8.1	Type of drive control			Stepless	Stepless
10.7	Level of noise at the ear level of the driver according to EN 12 053:2001 and EN ISO 4871 in work LpAZ		dB(A)	62 [3]	62 [3]
10.7.1	Level of noise at the ear level of the driver according to EN 12 053:2001 and EN ISO 4871, drive/lift/idle LpAZ		dB(A)	73 / 62 / - [3]	73 / 62 / - [3]
10.7.2	Whole-body vibration (EN 13 059:2002)			0.7	0.7
10.7.3	Hand-arm vibration (EN 13 059:2002)				

1) Forks 540 × 1150, battery 620 Ah
2) Forks 540 × 1150/ lift 1200mm, battery 620 Ah
3) Inaccuracy of 4 dB(A)
4) Fork carriage length 2375 mm
5) With 620Ah battery + 100mm
6) Travel speed when drivers platform >300mm 5,5km/h

Ast = Wa - x + l6 + 200
Ast = Working aisle width
Wa = Turning radius
a = Safety clearance = 2 ×100 mm
R = $\sqrt{(l6 + x)2 + (b12 / 2)^2}$
l6 = Pallet length (800 or 1000 mm)
b12 = Pallet width (1200 mm)

VELÍA ES

LOW LEVEL ORDER PICKERS

OPB20N2X

SCISSOR LIFT FORKS MODEL

2.0 tonnes

OPB20N2XP

SCISSOR LIFT FORKS AND RISING PLATFORM MODEL

2.0 tonnes

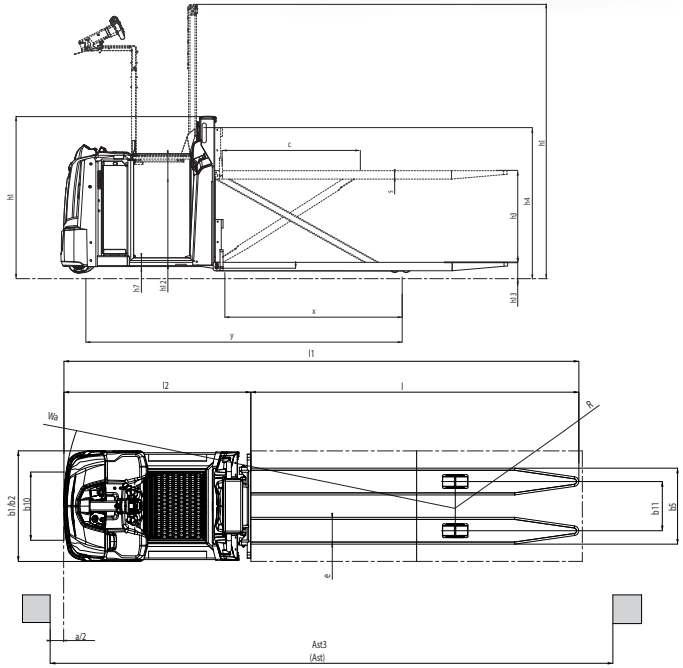

Continuing improvement may lead to changes in these specifications

VDI - PERFORMANCE & DIMENSIONS

VELÍA ES

LOW LEVEL ORDER PICKERS

OPB12N2F

RISING FORKS MODEL

1.2 tonnes

OPB12N2FP

RISING FORKS AND RISING PLATFORM MODEL

1.2 tonnes

	CHARACTERISTICS				
1.1	Manufacturer			Mitsubishi	Mitsubishi
1.2	Manufacturer's model designation			OPB12N2F	OPB12N2FP
1.3	Power source			Battery	Battery
1.4	Operator type			Stand-on	Stand-on
1.5	Load capacity	Q	kg	1200	1200
1.6	Load center distance	c	mm	600	600
1.8	Load wheel axle to fork face (forks lowered)	x	mm	785	785
1.9	Wheelbase	y	mm	1929 [5]	1929 [5]
	WEIGHT				
2.1	Truck weight without load, with maximum battery weight		kg	1220 [2]	1356 [2]
2.2	Axle loadings with nominal load & maximum battery weight, drive/load side		kg	972 / 1448	1059 / 1497
2.3	Axle loadings without load & with maximum battery weight, drive/load side		kg	853 / 367	940 / 416
	WHEELS, DRIVE TRAIN				
3.1	Tyres: PT=Power Thane, Vul=Vulkollan, P=Polyurethane, N=Nylon, R=Rubber drive/load side			Vul / Vul	Vul / Vul
3.2	Tyre dimensions, drive side		mm	ø250	ø250
3.3	Tyre dimensions, load side		mm	ø85	ø85
3.4	Castor wheel dimensions (diameter x width)		mm	ø180 × 65	ø180 × 65
3.5	Number of wheels, load/drive side (x=driven)			4 / 1x1	4 / 1x1
3.6	Track width (center of tyres), drive side	b10	mm	494	494
3.7	Track width (center of tyres), load side	b11	mm	355	355
	DIMENSIONS				
4.2a	Height with mast lowered	h1	mm	1173	1394 / 2244
4.4	Lift height	h3	mm	765 / 1115	765 / 1115
4.5	Height with mast extended	h4	mm	1275 / 1625	1275 / 1625
4.8	Seat- or stand height	h7	mm	123	150
4.14	Platform height, raised	h12	mm	-	1000
4.15	Fork height, fully lowered	h13	mm	85	85
4.19	Overall length	l1	mm	2471 [5]	2471 [5]
4.20	Length to fork face	l2	mm	1321 [5]	1321 [5]
4.21	Overall width	b1/b2	mm	800	800
4.22	Fork dimensions (thickness, width, length)	s / e / l	mm	56 / 186 / 950-1450	56 / 186 / 950-1450
4.25	Outside width over forks (minimum / maximum)	b5	mm	540 / 570	540 / 570
4.32	Ground clearance at center of wheelbase, (forks lowered)	m2	mm	25	25
4.34a	Working aisle width (Ast) with 800 x 1200 mm pallets, load lengthwise	Ast	mm	2881 [5]	2881 [5]
4.35	Turning radius	Wa	mm	2106 [5]	2106 [5]
	PERFORMANCE				
5.1	Travel speed, with / without load		km/h	9.0 / 9.0 (opt 9 / 13)[7]	9.0 / 9.0 (opt 9 / 13) [7]
5.2	Lifting speed, with / without load		m/s	0.20 / 0.41	0.20 / 0.41
5.3	Lowering speed, with / without load		m/s	0.30 / 0.36	0.30 / 0.36
5.7	Gradeability, with / without load		%	7 / 15	7 / 15
5.10	Service brake			Electric	Electric
	ELECTRIC MOTORS				
6.1	Drive motor capacity (60 min. short duty)		kW	2.6	2.6
6.2	Lift motor output at 15% duty factor		kW	2.2	2.2
6.4	Battery voltage/capacity at 5-hour discharge		V/Ah	24 / 465-620	24 / 465-620
6.5	Battery weight		kg	355-493	355-493
6.6a	Energy consumption according to EN 16796		kWh/h	0.37	0.37
	MISCELLANEOUS				
8.1	Type of drive control			Stepless	Stepless
10.7	Level of noise at the ear level of the driver according to EN 12 053:2001 and EN ISO 4871 in work LpAZ		dB(A)	62 [3]	62 [3]
10.7.1	Level of noise at the ear level of the driver according to EN 12 053:2001 and EN ISO 4871, drive/lift/idle LpAZ		dB(A)	73 / 62 / - [3]	73 / 62 / - [3]
10.7.2	Whole-body vibration (EN 13 059:2002)			0.6	0.6
10.7.3	Hand-arm vibration (EN 13 059:2002)			<2.5	<2.5

1) Forks 540 × 1150, battery 620 Ah
2) Forks 540 × 1150/ lift 1200mm, battery 620 Ah
3) Inaccuracy of 4 dB(A)
4) Fork carriage length 2375 mm
5) With 620Ah battery + 100mm
7) Travel speed when drivers platform >300mm 5,5km/h
850mm lift: Travel speed >300mm lift 5,5km/h,
1200mm lift: Travel speed >300 – 900mm lift 5,5km/h, >900mm lift 3km/h

Ast = Wa - x + l6 + 200
Ast = Working aisle width
Wa = Turning radius
a = Safety clearance = 2 ×100 mm
R = $\sqrt{(l6 + x)2 + (b12 / 2)^2}$
l6 = Pallet length (800 or 1000 mm)
b12 = Pallet width (1200 mm)

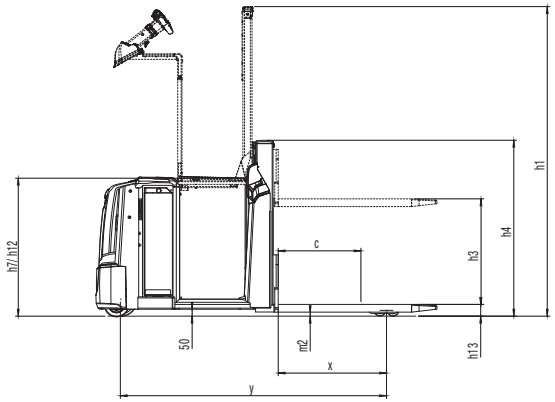

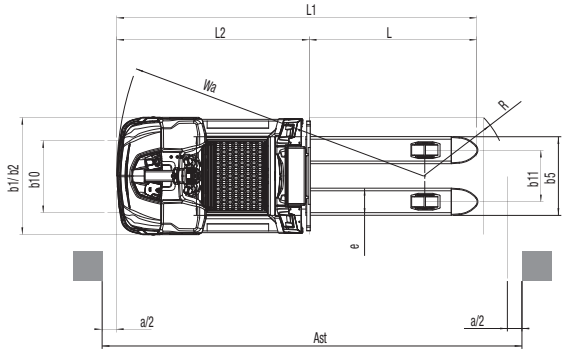

Continuing improvement may lead to changes in these specifications

STANDARD EQUIPMENT & OPTIONS

● = Standard
● = Option

	OPB20N2	OPB25N2	OPB20N2P	OPB25N2P	OPB20N2X	OPB20N2XP	OPB12N2F	OPB12N2FP
GENERAL								
Multifunctional steering wheel (electric 200°)	●	●	●	●	●	●	●	●
Power ON/OFF by Key switch	●	●	●	●	●	●	●	●
Hourmeter & BDI	●	●	●	●	●	●	●	●
ECO/PRO mode	●	●	●	●	●	●	●	●
Drive speed reduction in curves	●	●	●	●	●	●	●	●
Maximum drive speed adjusted according to load weight	●	●	●	●	●	●	●	●
Floor mat acting as dead man's pedal	●	●	●	●	●	●	●	●
Crane battery change	●	●	●	●	●	●	●	●
Polyurethane wheels	●	●	●	●	●	●	●	●
Tandem load wheels polyurethane	●	●	●	●	●	●	●	●
Suspended operator's platform	●	●	●	●	●	●	●	●
Simultaneously driving and lifting the forks	●	●	●	●	●	●	●	●
Hill hold	●	●	●	●	●	●	●	●
Automatic parking brake	●	●	●	●	●	●	●	●
Lifting driver's platform, h=1000 mm (OPB20N2/25N2P, 20N2XP, 12N2FP)	-	-	●	●	-	●	-	●
Lift height (h3 + h13) 220 mm (OPB20N2/25N2, OPB12N2FP)	●	●	●	●	-	-	-	-
Lift height (h3 + h13) 850 mm (OPB12N2F, OPB12N2FP)	-	-	-	-	-	-	●	●
Lift height (h3 + h13) 855 mm (OPB20N2X/25N2XP)	-	-	-	-	●	●	-	●
Simultaneous driving and lifting the driver's platform	-	-	●	●	-	●	-	●
Drive speed reduction when platform raised (4 km/h)	-	-	●	●	-	●	-	●
Drive speed reduction when forks raised (lift height > 300 mm)	-	-	-	-	●	●	●	●
ENVIRONMENT								
Cold store design, 0C° to -35C°	●	●	●	●	●	●	●	●
DRIVE, LIFT CONTROLS								
Walk beside drive button in backrest, FWD/BWD	●	●	●	●	●	●	●	●
Buttons for lift / lower on sides of backrest	●	●	●	●	●	●	●	●
SAFETY								
Blue point safety light towards driving direction (forks trailing)	●	●	●	●	●	●	●	●
Red point safety light towards driving direction (forks trailing)	●	●	●	●	●	●	●	●
Driving light towards driving direction (forks trailing)	●	●	●	●	●	●	●	●
Warning strobe, yellow	●	●	●	●	●	●	●	●
Drive alarm (programmable)	●	●	●	●	●	●	●	●
Fire extinguisher	●	●	●	●	●	●	●	●
WHEEL OPTIONS								
Polyurethane traction and load wheels	●	●	●	●	●	●	●	●
Power friction traction wheel	●	●	●	●	●	●	●	●
OUTLOOK								
Special RAL color on front machinery steel cover	●	●	●	●	●	●	●	●

VELIA ES

OPB12-25N2(X)(F)(P) Series

LOW LEVEL ORDER PICKERS

1.2 – 2.5 tonnes

Multifunctional steering wheel with optional colour display.

Optional walk beside drive button and buttons for lift / lower in backrest.

Fire extinguisher

Optional blue point safety light.

Continuing improvement may lead to changes in these specifications

STANDARD EQUIPMENT & OPTIONS

● = Standard
● = Option

OTHER OPTIONS	OPB 20N2	OPB25N2	OPB20N2P	OPB25N2P	OPB20N2X	OPB20N2XP	OPB12N2F	OPB12N2FP
High drive speed 13 km/h (without load)	●	●	●	●	-	-	●	●
PIN code access with BDI display	●	●	●	●	●	●	●	●
PIN code access with color display	●	●	●	●	●	●	●	●
Color display without PIN code access	●	●	●	●	●	●	●	●
Walk beside drive button in backrest, FWD / BWD	●	●	●	●	●	●	●	●
Buttons for lift/lower on sides of backrest	●	●	●	●	●	●	●	●
Accessory rail in front	●	●	-	-	●	-	●	-
Picking tray, for OPB20/25N2P, OPBN2XP and OPB12N2FP models only. Max. 50 kg	-	-	●	●	-	●	-	●
Scanner holder	●	●	●	●	●	●	●	●
Equipment holder (RAM mountings)	●	●	●	●	●	●	●	●
Wrapping holder	●	●	●	●	●	●	●	●
Load backrest	●	●	●	●	●	●	●	●
Rear grab handle on backrest	●	●	-	-	●	-	-	-
Foot switch for lowering the driver's platform	-	-	●	●	-	●	-	●
Sideways battery change	●	●	●	●	●	●	●	●
Clipboard, A4	●	●	●	●	●	●	●	●
Front storage boxes	●	●	-	-	●	-	●	-
Storage folder on bottom of the platform	●	●	-	-	●	-	●	-
Entry and exit rollers for crosswise pallet handling	●	●	●	●	-	-	-	-
Back cushion, tiltable to seat position for back & feet rest. Adjustable in height.	●	●	-	-	●	-	●	-
Power supply, 12 V	●	●	●	●	●	●	●	●
Power supply, USB 5 V	●	●	●	●	●	●	●	●
Heavy duty front nylon strip covered bumper	●	●	●	●	●	●	●	●
Raised front guard plate	●	●	●	●	●	●	●	●
Load Weight Indicator +/- 50kg	●	●	●	●	●	●	●	●

VELÍA ES

OPB12-25N2(X)(F)(P) Series

LOW LEVEL ORDER PICKERS

1.2 – 2.5 tonnes

Equipment holder (RAM mountings)

Foot switch for lowering the driver's platform

Rear grab handle on backrest

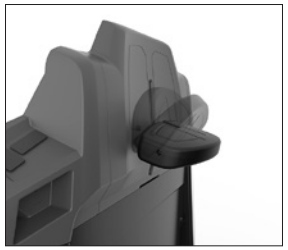

Back cushion, tiltable to seat position. Adjustable in height.

Continuing improvement may lead to changes in these specifications

WHEN RELIABILITY IS EVERYTHING...

VELiA
THE FRONT RUNNER

With a name that reflects the speed of its work, VELiA is always ahead of the pack — thanks to award-winning productivity and ergonomics.

Swift, versatile and manoeuvrable, there is a VELiA order picker to meet every need.

Like any product bearing the "MITSUBISHI" name our materials handling equipment benefits from the tremendous heritage, huge resources and cutting-edge technology of one of the world's largest corporations – Mitsubishi Heavy Industries Group.

Engineering spacecraft, jet planes, power plants and more, MHI specialises in those technologies where performance, dependability and superiority decide your success or failure...

So when we promise you quality, reliability and value for money,
you know it's a guarantee we have the power to deliver.

That's why every model in our award-winning and comprehensive range of lift trucks and warehouse equipment is built to a high specification – to ensure it keeps working for you. Day after day. Year after year. Whatever the job. Whatever the conditions.

YOU'LL NEVER WORK ALONE

As your local authorised dealer, we are here to keep your trucks working – through our extensive experience, our technical excellence and our commitment to customer care.

We are your local experts, backed by efficient channels to the entire organisation of Mitsubishi Forklift Trucks.

No matter where you are, we are close by – with the capability to meet your needs.

Discover how Mitsubishi Forklift Trucks give you more from your local authorised dealer or when you visit our website www.mitforklift.com

Performance specifications may vary depending on standard manufacturing tolerances, vehicle condition, types of tyres, floor or surface conditions, applications or operating environment. Trucks may be shown with non-standard options. Specific performance requirements and locally available configurations should be discussed with your distributor of Mitsubishi forklift trucks. We follow a policy of continual product improvement. For this reason, some materials, options and specifications could change without notice.

mitforklift@mcfe.nl

WESM1978 (06/20) © 2020 MLE

Mitsubishi Logisnext Europe B.V.
Hefbrugweg 77, 1332 AM Almere
The Netherlands
Tel: +31 (0)36 5494 411

MITSUBISHI FORKLIFT BRIEFING

App Store
Google Play

YouTube

mft2.eu/youtube

MITSUBISHI FORKLIFT TRUCKS